# Norsup ONE V3
Complete Manual

NorsupOne is manufactured by:

Europe Pool Supplies BV – Randweg 10 – 4116 GH BUREN (GLD) – Netherlands

www.norsup.eu – info@norsup.eu

## Changelog

| By | Description | Version |
|---|---|---|
| Casper | Version 1.1: footer version harmonized to V1.1 on all pages (previously a mix of V0.4 and V1.0); minor text corrections (e.g., “being heated” → “be heated”, missing preposition in Pentair Intelliflo procedure: “run at scheduled speed” → “run at the scheduled speed”); changelog row added. | 1.1 |
| | | |
| | | |
| | | |
| | | |
| | | |
| | | |
| | | |

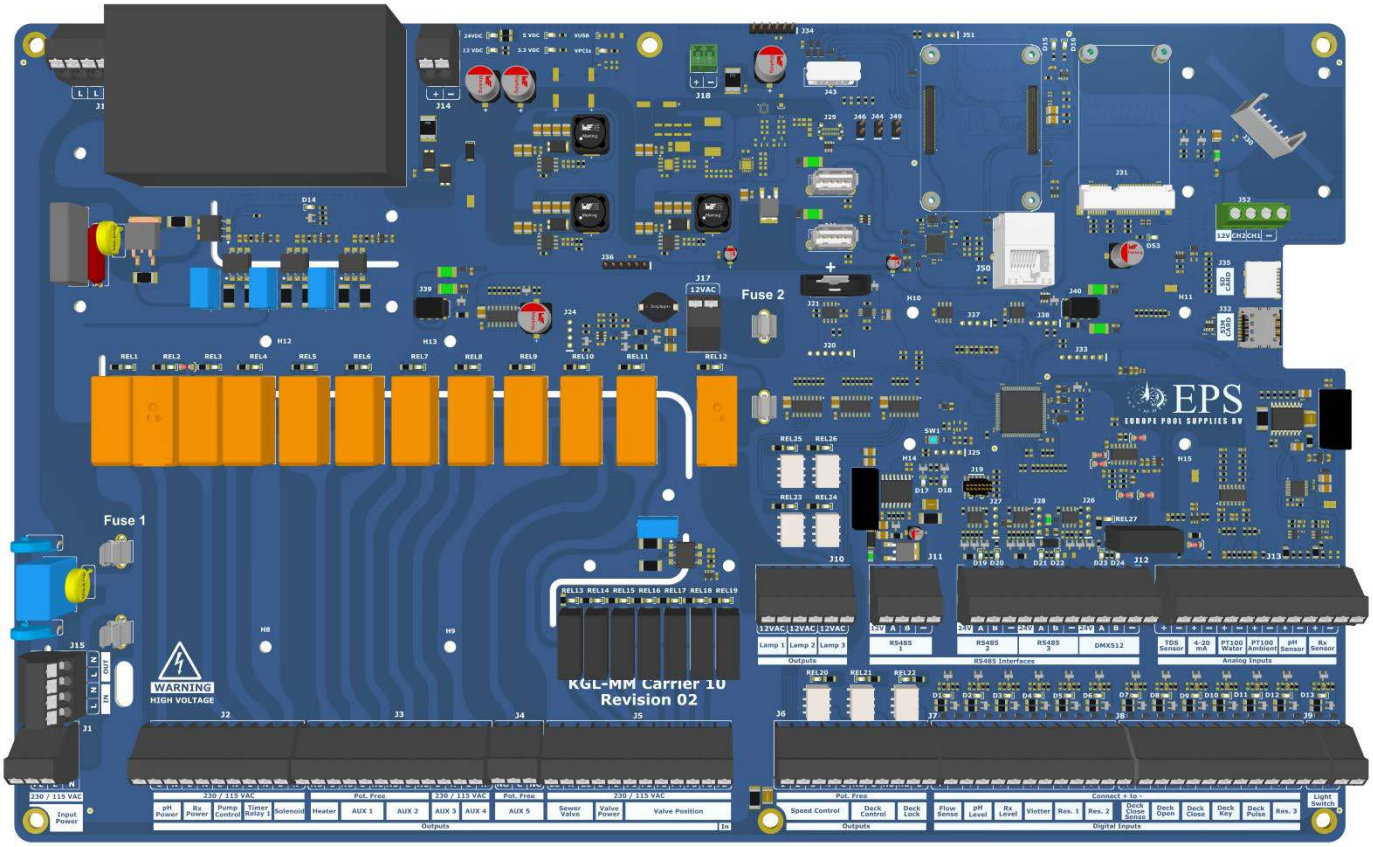

# Table of Contents

Changelog ..... 2
1. Introduction ..... 9
1.1 Safety Instructions and Warnings ..... 9
1.1.1 General Safety Instructions ..... 9
1.1.2 Installation Requirements ..... 9
1.1.3 Electrical Safety ..... 9
1.1.4 Other Safety Measures ..... 10
1.2 CE Conformity ..... 10
1.3 WEEE Directive ..... 10
1.4 Technical Specifications ..... 10
1.4.1 Environmental conditions: ..... 10
1.5 Liability and Disclaimer ..... 10
2. Norsup ONE V3 Warranty ..... 11
2.1 Warranty Period (Commercial Warranty) ..... 11
2.2 Conditions for invoking the commercial warranty ..... 11
2.3 Scope of the Commercial Warranty ..... 11
2.4 Exclusions from the Commercial Warranty ..... 11
2.5 Costs and Additional Provisions ..... 11
2.6 Limitation of Liability ..... 12
2.7 Procedure for Warranty Claims ..... 12
2.8 Annual Maintenance ..... 12
2.9 Winterization ..... 12
3. Mechanical Installation of Norsup ONE V3 ..... 13
3.1 Dimensions ..... 13
3.2 Hydraulic Overview ..... 13
3.2.1 pH and chlorine injection with Norsup 5-in-1 sampling circuit ..... 14
3.2.2 pH electrolysis/hydrolysis ..... 15
3.3 Installation of the Norsup ONE V3 ..... 16
3.4 Installation of the sampling jar ..... 17
3.4.1 Installation of the electrodes and sensors ..... 17
3.4.2 Installation of the outdoor temperature sensor ..... 19
3.4.3 Installation of dosing pumps ..... 20
4. Electrical Installation of the Norsup ONE V3 ..... 23
4.1 Wire End Sleeves ..... 23
4.2 Electrical Overview ..... 24
4.3 Connection of filter pumps ..... 25
4.3.1 Single speed, filter pump power supply: ..... 26
4.3.2 Pentair SuperFlo/Whisperflo VS/VS2 ..... 27
4.3.3 Pentair IntelliFlo/WhisperFlo ..... 28
4.3.4 Pentair IntelliFlo 3 ..... 29
4.3.5 Speck BADU Eco Touch, ECO VS, Norsup EVO PRO, Starline inverter ..... 30
4.3.6 Norsup EVO PRO ..... 31
4.3.7 Davey ..... 32

4.3.8 Optidrive e2 ..... 33
4.3.9 Hayward VSTD ..... 34
4.3.10 DAB E-swim ..... 35
4.3.11 Aquagem inverter pool pump (also known as: xflow, inverstar, inverco, AquaSphere Eco IVS, inverpro, inversilence) ..... 36
4.4 Chemical Water Treatment Connections ..... 37
4.4.1 Connecting the pH, Rx, TDS sensor ..... 38
4.4.2 Connecting the flow sensor and low-level alarms/suction lance ..... 39
4.5 Heating ..... 40
4.5.1 Conventional On/Off ..... 41
4.5.2 Connecting the temperature sensor ..... 42
4.6 Water Supply ..... 43
4.6.1 Connecting the fill valve/solenoid ..... 44
4.6.2 Connecting the float ..... 44
4.6.3 Connecting the WLS 3 ..... 44
4.7 Rewinding ..... 46
4.7.1 Autovalve ..... 47
4.7.2 Pneumatic ..... 47
4.8 Cover ..... 48
4.8.1 Connecting the Key Switch ..... 49
4.8.2 Connecting the external control box for the cover ..... 50
Roldeck: ..... 50
Aquadeck ECB ..... 50
Aquadeck ECD ..... 51
Aquatop (T&A) ..... 51
Mecatec ..... 52
4.8.3 Tubular Motor Control ..... 52
PCS ..... 53
Roldeck ..... 53
Aquadeck/T&A ..... 54
Mecatec ..... 54
Covrex/Sirem/Soldeck ..... 54
4.9 Lighting ..... 55
4.9.1 12 VAC Lighting Power Supply ..... 55
4.10 Auxiliary Relay ..... 55
4.10.1 Connecting Auxiliary Relays ..... 57
4.11 Other Inputs ..... 59
4.12 Overflow Pool ..... 60
4.12.1 Safety and Responsibility (Disclaimer) ..... 60
4.12.2 Hydraulic Recommendations ..... 60
4.12.3 Electrical Installation Advice ..... 61
Settings for aux 3 and aux 4 ..... 61
5. Setup and Operation ..... 65
5.1 General Operation ..... 65
5.1.1 Main control screen ..... 66
5.1.2 Main screen: control pages 2 and 3 ..... 67
5.1.3 Keyboard explanation ..... 67
5.2 General Settings ..... 68

5.2.1 Notifications ....68
5.2.2 Home screen **(expert)** ....68
5.2.2 Sensor Calibration **(expert)** ....69
5.2.3 Input **(expert)** ....69
5.2.4 Reserved Input 1–3 **(expert)** ....70
5.2.5 Selection options for Reserved input **(expert)** ....71
Tank empty (suction lance) settings **(expert)** ....71
pH tank empty (expert) ....71
pH tank empty time (expert) ....71
Cl tank empty (expert) ....71
Cl tank empty (expert) ....71
Tank empty delay (expert) ....71
Safety limits (dosing safety) (expert) ....71
Operation (rolling window) ....71
pH safety limit (expert) ....71
Cl safety limit (expert) ....71
Water level safety limit (expert) ....71
5.2.6 Output **(expert)** ....72
Off (expert) ....72
Aux 1 – Aux 6 (expert) ....72
Link AUX to another AUX (copy) ....72
pH+ (expert) ....73
Cooling (expert) ....73
Drain (expert) ....73
Deck Movement (expert) ....73
5.2.7 Pin Invert **(expert)** ....73
Invert auxiliary (Aux pins) (expert) ....73
Invert deck pins (Deck pins) (expert) ....73
Invert filter (Filter pump pins) (expert) ....74
Invert valve pins (Valve pins) (expert) ....74
Invert valve filter (Valve filter pins) (expert) ....74
Invert control (Control pins) (expert) ....74
Invert sense (Sense pins) (expert) ....74
Invert reserved (Reserved pins) (expert) ....74
5.3 Dosing Settings ....75
5.3.1 pH dosing **(expert)** ....75
5.3.2 pH mode **(expert)** ....75
5.3.3 Chlorine sensor **(expert)** ....75
5.3.4 Chlorine mode **(expert)** ....76
5.3.5 pH settings (pH dosing) ....76
pH setpoint ....76
Dosing time (only in mode time) (expert) ....76
Pause time (expert) ....76
pH setpoint hysteresis (expert) ....76
5.3.6 Rx settings (Chlorine dosing / Redox) ....77
Shock start/stop (only if Shock is active) ....77
Cl setpoint ....77
Dosing time (only in Time mode) (expert) ....77

Pause time (expert) ..... 77
Smart mode min. dosing time (only in Smart mode) (expert) ..... 77
Smart mode max. dosing time (only in smart mode) (expert) ..... 77
Cl setpoint hysteresis (expert) ..... 77
5.3.7 Disabled settings **(expert)** ..... 78
Temperature threshold (expert) ..... 78
Salt TDS (expert) ..... 78
Disable on flow sensor (expert) ..... 78
Disable on pump control (expert) ..... 78
5.3.8 General settings **(expert)** ..... 79
Temperature threshold (expert) ..... 79
Temperature threshold hysteresis (expert) ..... 79
TDS salt error (expert) ..... 79
TDS salt warning (expert) ..... 79
Pool volume (expert) ..... 79
Pump pH volume (expert) ..... 79
Pump Rx volume (expert) ..... 79
Cl and pH dosing linked (expert) ..... 79
Pause time between dosing pH and Rx (expert) ..... 79
5.4 Filter Control ..... 81
5.4.1 Safety and Responsibilities (Filter Control) ..... 81
5.4.2 Filter pump settings ..... 81
5.4.2.1 Filter pump select **(expert)** ..... 82
5.4.2.2 On settings ..... 83
Default on ..... 83
Default speed ..... 83
On schedule (see next section) ..... 83
Frost protection (expert) ..... 83
Frost setpoint (Only if frost protection is enabled) (expert) ..... 83
Overheat protection (expert) ..... 83
Hot setpoint (Only if overheat protection is enabled) (expert) ..... 83
5.4.2.3 (continued) Filter pump – Schedule (weekly schedule) ..... 84
5.5 Backwash ..... 86
5.5.1 Safety and Responsibilities (Backwash) ..... 86
5.5.2 Backwash settings **(expert)** ..... 87
Days ..... 87
TDS setpoint ..... 87
Backwash timeout time (expert) ..... 87
Backwash gated time (expert) ..... 87
Backwash pneumatic time ..... 87
Backwash sewer time (expert) ..... 87
Backwash duration time ..... 87
Backwash rinse time ..... 87
Disable on flow sensor (expert) ..... 88
Disable on pump control (expert) ..... 88
Backwash scheme (expert) ..... 88
5.5.3 Backwash configurations **(expert)** ..... 89
Backwash mode (expert) ..... 89
Sewer (expert) ..... 89

Rinse (expert) ... 89
TDS (expert) ... 89
Water level (expert) ... 89
5.6 Temperature Management ... 90
Heating configuration (expert) ... 90
Temperature mode (expert) ... 90
Temperature setpoint ... 90
On settings (expert) ... 90
Off settings (expert) ... 90
Modbus settings (if available) (expert) ... 90
Temperature hysteresis (in Hysteresis mode) (expert) ... 90
5.6.1 Zero-E **(expert)** ... 91
Connecting Zero-E: ... 91
Setting up Zero-E: **(expert)** ... 91
5.7 Lighting ... 93
5.7.1 Safety and Responsibilities (Lighting) ... 93
5.7.2 Lighting Menu Overview ... 94
Lighting selection (expert) ... 94
Default on ... 94
Weekly scheme ... 94
Weekdays + time window (Mon–Sun, start/stop) ... 94
Next color (only for STL-RGB & Rotating RGB) ... 94
Reset color (only for STL-RGB & Rotating RGB) ... 94
Off when cover closed ... 94
Next pulse time (only for STL-RGB & Rotating RGB) ... 94
Reset pulse time (only for STL-RGB & Rotating RGB) ... 94
Select color (only for STL-RGB) ... 94
5.8 Water Level ... 95
5.8.1 Safety and Responsibilities (Water Level) ... 95
5.8.2 Water level (main page) ... 95
water level sensor (level measurement) (expert) ... 95
water level control (expert) ... 96
Wls 3 configuration (expert) ... 96
Water level off settings (expert) ... 96
5.9 Cover (with Covco/cover control on board) ... 97
5.9.1 Status Panel (left side of the screen) ... 97
5.9.2 Motor control – Automatic ... 97
5.9.3 Motor control – Programming ... 98
5.9.4 Motor control – Manual ... 98
5.9.5 Settings (advanced Covco settings) ... 99
5.9.6 Calibration procedure (required during initial commissioning) ... 100
5.9.7 Calibration with calibration tool ... 101
5.10 Cover (only without Covco/CoverControl on board) (external control) ... 102
Open ... 102
Close ... 102
Key deck (expert) ... 102
Key buttons (expert) ... 102
Sense (expert) ... 102

Lock (expert) ... 102
Pulse time (expert) ... 102
Wait time (expert) ... 102
5.10.1 Commissioning and testing ... 102
5.11 Auxiliary relays (Aux 1 through Aux 5) ... 103
5.11.1 Safety and Responsibilities (Auxiliary Relay) ... 103
5.11.2 Auxiliary Main Screen ... 103
Auxiliary name ... 103
Enable settings ... 103
Disable settings ... 103
5.11.3 Enable settings (Auxiliary X on) ... 104
Default enabled ... 104
Weekly scheme ... 104
Mon / Tue / Wed / Thu / Fri / Sat / Sun + time fields ... 104
Enable reserved input 1 (expert) ... 104
Enable reserved input 2(expert) ... 104
Enable reserved input 3 (expert) ... 104
5.11.4 Disable settings (Auxiliary X off) ... 105
Disable reserved input 1 (expert) ... 105
Disable reserved input 2 (expert) ... 105
Disable reserved input 3 (expert) ... 105
Disable when deck is closed ... 105
Disable on backwash ... 105
Disable no flow ... 105
Disable pump off ... 105
5.11.5 Recommended commissioning ... 105
6. Effective pool grounding ... 106
6.1 Disclaimer ... 106
6.2 Introduction ... 106
6.3 Problem Statement and Objective ... 106
6.4 Grounding Strategy (project-dependent) ... 106
6.5 Installation Procedure ... 106
6.5.1 Earth electrode and spreading resistance ... 106
6.5.2 Equipotential bonding ... 106
6.5.3 Norsup ONE V3 and WLS-3 ... 107
6.5.4 External devices ... 107
6.5.5 RCD/ground fault protection ... 107
6.6 Decision rule NEN 1010 / inspection ... 107
6.7 Schematic Implementation ... 108
6.8 Expected improvement ... 108
6.9 Conclusion ... 108

# 1. Introduction

## 1.1 Safety Instructions and Warnings

This manual is intended exclusively for technically qualified personnel responsible for the installation, configuration, and maintenance of the entire system. The manufacturer is not liable for damage and/or malfunctions caused by the intervention of unqualified personnel or by use that is contrary to this manual

### 7¡7¡7.General.Safety.Instructions

- Never place the product near flammable materials.
- In the event of a leak, the system must be taken out of service immediately. If the situation requires it, valves and electrical equipment must be automatically shut off.
    - Always perform a thorough risk analysis prior to installation and commissioning.
- Ensure that the system is de-energized and that liquid leakage is prevented before performing maintenance or repair work.
- In the event of malfunctions or abnormalities (such as smoke or the smell of burning), the power supply must be immediately shut off and the installer contacted.
- Use only original spare parts recommended by MegaGroup Trade Holding B.V. The use of non-approved parts or modifications may result in damage to the product and void the warranty.

### 7¡7¡8.Installation.Requirements

- Install the system away from direct heat sources, in a dry room, protected from direct sunlight.
- The maximum ambient temperature is 40 °C.
- The minimum temperature must ensure that all liquids to be dispensed remain liquid and must not be lower than specified in the “Technical Specifications” section.
- The system must be mounted vertically on a wall so that it hangs stably, straight, and securely.
- Choose a location that is easily accessible for operation, maintenance, and calibration.

### 7¡7¡9.Electrical.Safety

- Check that the device is connected to an outlet protected against short circuits.
- The device must be powered via an isolation transformer or a residual current device (RCD) with a rated fault current of no more than 30 mA.
- Damaged cables or parts that pose a safety risk must be replaced by authorized technicians.
- Connect a grounding strap between the cabinet door and the cabinet itself and ensure complete and proper grounding.

## 7¡7¡0.Other.Safety.Measures

- Ensure that safety devices for pool covers are always within reach in case of an emergency.
- Before using a cover, always check for obstructions and proper operation according to the manual for the specific device.
- MegaGroup Trade Holding B.V. accepts no liability for damage resulting from the use of a slatted cover or other covers.
- Always monitor and maintain the chemical water balance in accordance with the guidelines of the Ministry of Health. Automatic control systems assist in this process but never replace manual measurements and checks.

## 1.2 CE Conformity

Electronic measurement and control unit (“the Product”)

- Intended use
  Electronic measurement and control unit for swimming pool installations.
- Legal classification
  Radio equipment Directive 2014/53/EU (incl. electrical safety assessment based on . Low Voltage Directive 2014/35/EU
  EMC requirements based on . EMC Directive 2014/30/EU and effective use of radio spectrum)
- RoHS Directive 2011/65/EU

## 1.3 WEEE Directive

This product is covered by the European Waste Electrical and Electronic Equipment (WEEE) Directive.

Ensure proper and environmentally friendly disposal of this device at the end of its service life. To do so, contact your dealer or supplier, or consult your local recycling center for more information.

## 1.4 Technical Specifications

Supply voltage: 230 V~, 50 Hz

Fuse:

Carrier unit: 16AT

Covco: 10A

## 7¡0¡7.Environmental.conditions¿

Storage temperature: -20 °C to +60 °C

Operating temperature: -5 °C to +40 °C

Relative humidity: maximum 90%, non-condensing

Housing: High-rigidity HIPS

Mounting: Wall bracket (mounting system)

## 1.5 Liability and Disclaimer

Norsup is not liable for damage or injury resulting from improper use, incorrect installation, or failure to follow the instructions in this manual. The system must be installed and maintained in accordance with the guidelines described herein.

If in doubt about installation, settings, or use, always consult a qualified professional. All components of the pool system must be operated with the utmost care to prevent accidents. Norsup accepts no liability for incidents resulting from failure to comply with the safety regulations.

## 2. Norsup ONE V3 Warranty

These warranty terms do not affect the consumer's statutory rights under applicable national consumer sales law, based on Directive (EU) 2019/771.
The consumer is entitled to a product that complies with the contract ("conformity"). If the product is not in conformity, the consumer is entitled to repair or replacement free of charge, and—if that is not possible—to a price reduction or termination of the contract, in accordance with the statutory provisions.

This commercial warranty offers additional rights and conditions, as described below.

### 2.1 Warranty Period (Commercial Warranty)

Standard warranty: 3 years from the date of delivery
This period does not affect the statutory conformity period.

### 2.2 Conditions for invoking the commercial warranty

The commercial warranty applies exclusively if:

1. The product was purchased from an authorized dealer;
2. A valid and legible proof of purchase is provided (including date, model, and seller);
3. The product has been installed in accordance with the instructions, preferably by an authorized installer;
4. The product has been used correctly in accordance with the manual and its intended use;
5. Periodic maintenance has been demonstrably performed;
6. The serial number and type plate are intact and legible;
7. Repairs have been performed exclusively by NORSUP or an authorized service partner.

### 2.3 Scope of the Commercial Warranty

If a defect is covered by this warranty, NORSUP will, at its discretion:

- repair the product or part free of charge, or
- replace the product or part with an equivalent item.

The warranty does not include any right to a refund, replacement equipment, or any form of compensation, except where required by law.

### 2.4 Exclusions from the Commercial Warranty

The commercial warranty does not apply in the following cases:

Normal wear and tear and consumable parts

- Seals, O-rings, and gaskets
- Electrodes and parts with a limited service life
- Parts subject to normal wear and tear

Improper use or maintenance

- Use contrary to the manual
- Inadequate or overdue maintenance
- Improper water quality (e.g., pH, salinity, hardness outside specifications)
- Scale buildup, corrosion, or contamination

Installation and external factors

- Improper installation or connection
- Damage caused by frost, heat, moisture, or insufficient ventilation
- Electrical influences (power surges, lightning, faulty connection)
- Chemical damage caused by external substances

Modifications and non-genuine parts

- Use of non-original parts
- Modifications to the product
- Repairs by unauthorized third parties

Other exclusions

- Cosmetic damage that does not affect functionality
- Damage caused during transport or storage after delivery
- Software issues caused by external systems or incorrect configuration (without prejudice to rights under Directive (EU) 2019/770)

### 2.5 Costs and Additional Provisions

Unless otherwise required by mandatory law:

- Labor costs, call-out fees, transportation costs, and disassembly/assembly costs are covered by the warranty (provided the conditions are met);
- The warranty applies exclusively to private use; a shorter term may apply in the case of professional use;
- The warranty is not transferable without written consent.

## 2.6 Limitation of Liability

To the extent permitted by law, NORSUP's liability is limited to the obligations described in this warranty. NORSUP is not liable for:

- indirect or consequential damages;
- loss of revenue, profit, or use;
- damages resulting from product downtime;
- damage to other systems or property.

This limitation does not apply in cases of intent, gross negligence, or where liability cannot be excluded by law.

## 2.7 Procedure for Warranty Claims

To file a claim, the consumer must:

1. Contact the seller or authorized installer;
2. Provide proof of purchase;
3. Provide a clear description of the defect;
4. Make the product available for inspection upon request.

## 2.8 Annual Maintenance

- Replace peristaltic pump hoses on dosing pumps
- Replace rotary modules with ball bearings
- Replace injection valves
- Replace foot filters and/or suction lances
- Replace dosing hoses between the storage tank, pump, and injection point
- Check electrodes and replace them if their condition is 50% or less
- Calibrate electrodes
- Compare system values with independent verification measurements
- Check pipes, hoses, and couplings for leaks
- Check water balance, hardness, and alkalinity
- Check electrical safety devices
- Readjust pool covers annually to correct for wear in end positions

## 2.9 Winterization

Never completely shut down the system during the winter. By keeping the system powered on, the electronics remain at the correct temperature and condensation is prevented.

- Turn off filter schedules and activate the freeze protection
- Ensure that water pipes form a closed circuit so that the filter pump can circulate
- If the air temperature drops below 3 °C, the filter pump will automatically turn on
- Remove electrodes from the pipe and store them in storage fluid at room temperature
- Regularly check the operation of the frost protection; this is an additional protective measure and does not provide a complete guarantee against frost damage

# 3. Mechanical Installation of Norsup ONE V3

## 3.1 Dimensions

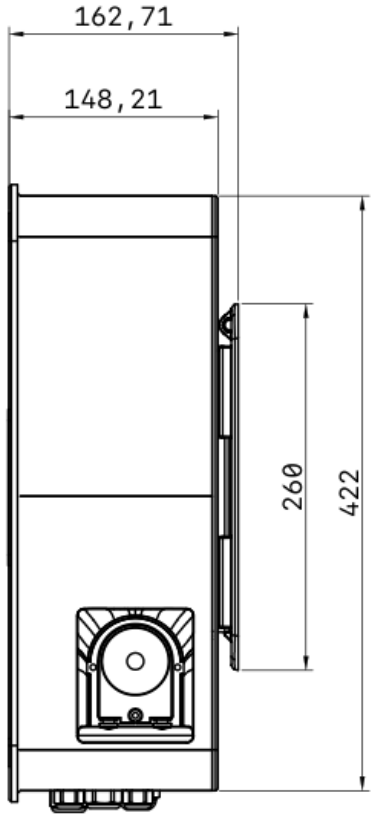


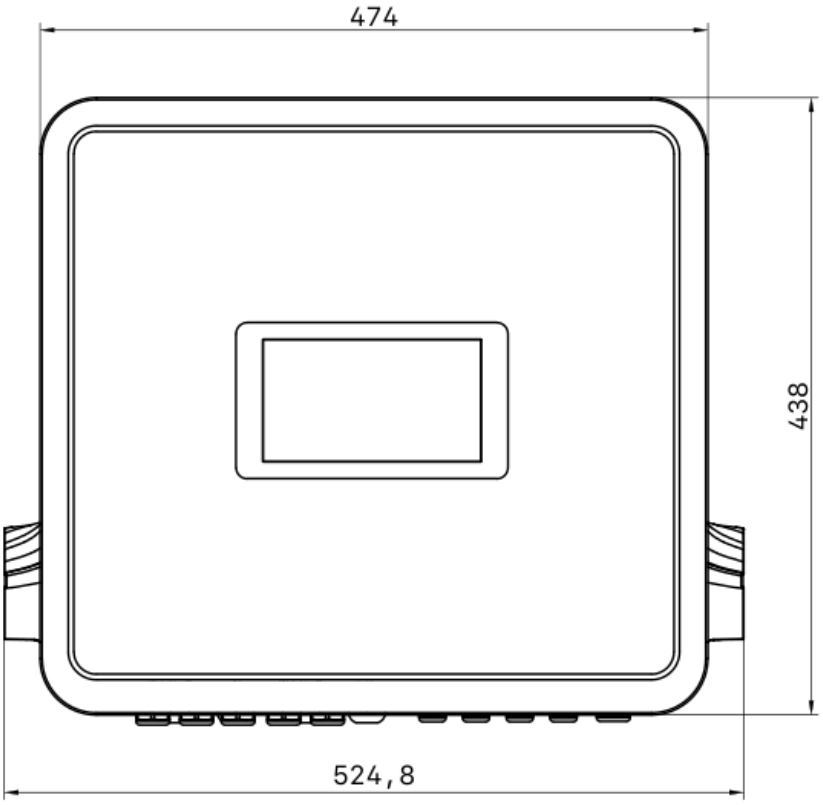


## 3.2 Hydraulic Overview

The hydraulic connections shown below are only recommendations and should be made under the guidance of a professional.

The illustration shows solar panels to indicate that the Norsup ONE V3 can communicate with the smart meter. This allows the pool to be heated via the solar panels. (Zero-E) See the manual for more information.

## 9¡8¡7.pH.and.chlorine.injection.with.Norsup.❶_in_7.sampling.circuit

⚠ The system can never actually be installed outdoors; the image below is for illustrative purposes only

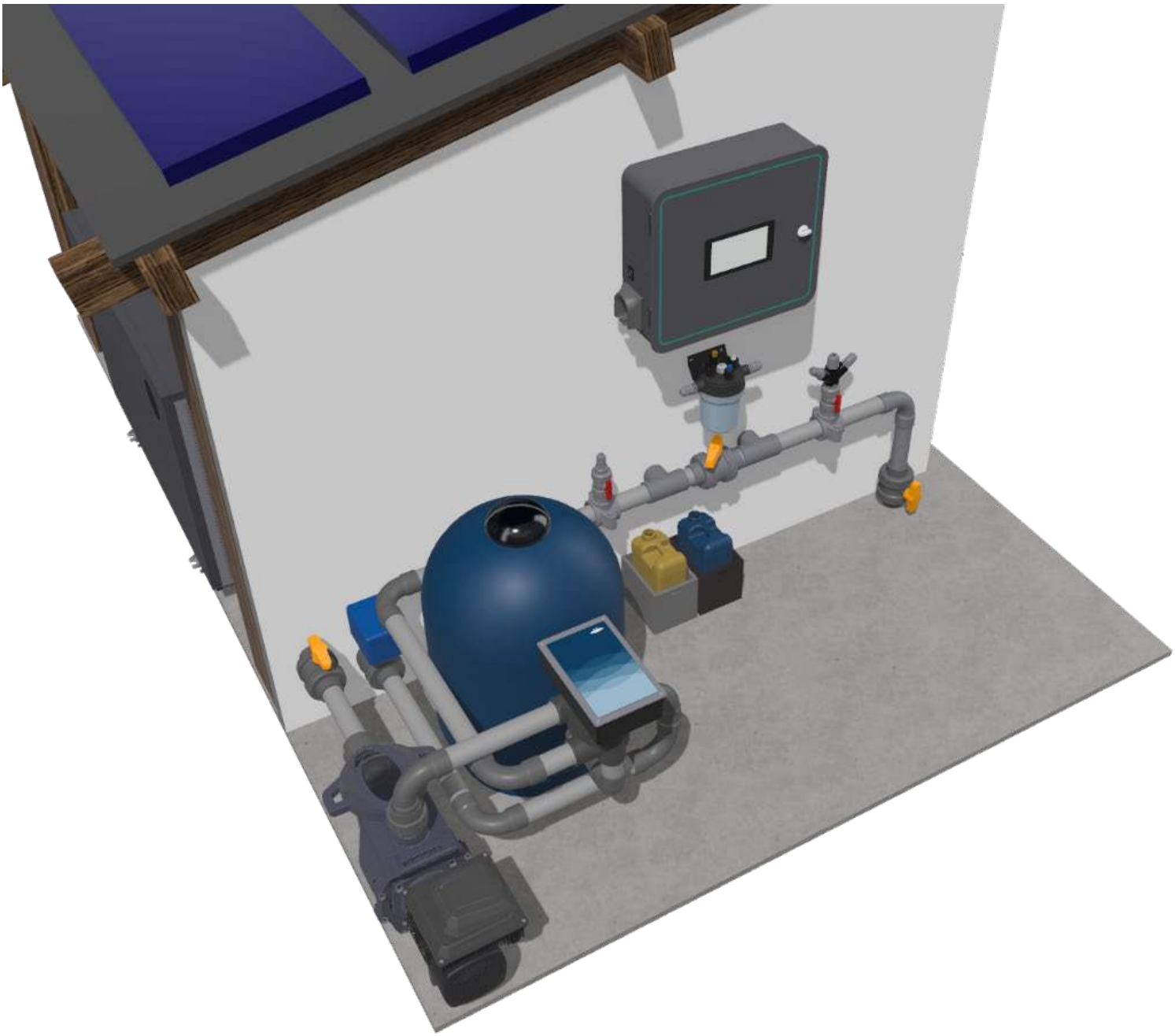

9¡8¡8.pH.electrolysis-hydrolysis

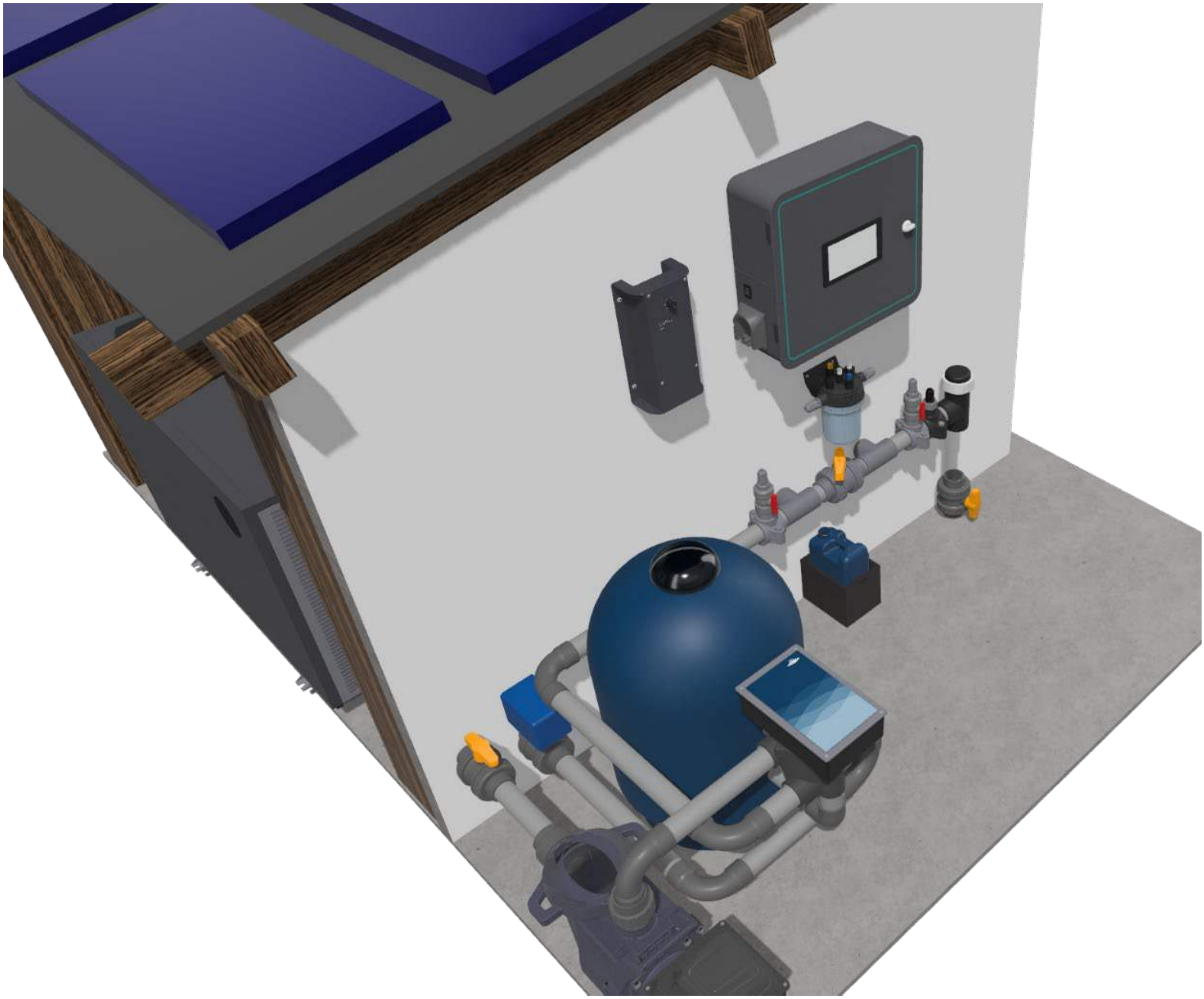

## 3.3 Installation of the Norsup ONE V3

**Installation with wall bracket and cable tray**

Mount the mounting bracket on a sturdy, flat surface using **6 mounting screws of your choice** (depending on wall type and load-bearing capacity). Use the **built-in level** in the bracket to align it exactly horizontally before tightening the screws permanently.

**Installation in combination with a large cable tray is strongly recommended.** This ensures neat, safe cable routing and makes it easier to adjust or expand the cabling later.

Once the bracket is correctly mounted, the **Norsup ONE V3**can be easily hung over the bracket. Make sure **to leave sufficient space around the cabinet**:

- So that the cabinet can be hung over the bracket without any problems;
    - At least 450 mm above the desired mounting location
- And so that the door can be fully opened for installation, service, and maintenance.

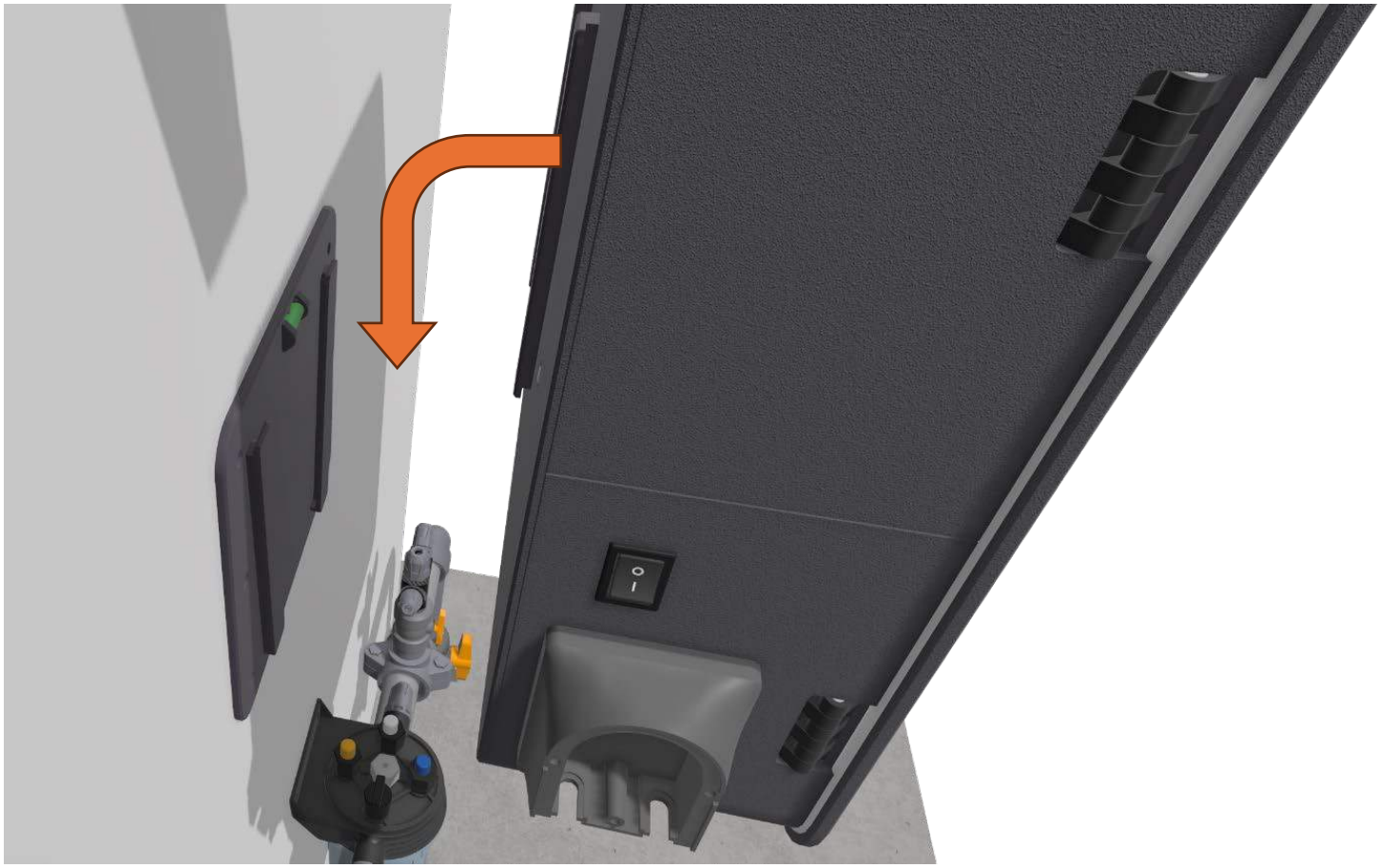

## 3.4 Installation of the sampling jar

**Installation instructions for sampling pot**

**Always check the specifications of the relevant 5-IN-1 sampling pot**

**1) Determine the location**

- Mount the sampling pot on a solid, flat wall and preferably close to the Norsup ONE V3, so that hoses and cabling remain short and organized.
- Choose a location with sufficient clearance around it:
  - Below the pot to allow the transparent cup to be unscrewed and cleaned;
  - On the sides for connecting pipes;
  - In front of the pot (and/or the cabinet) so that service and maintenance remain possible without disassembly.
- Always mount the pot vertically (cup facing down). This prevents air pockets and leaks during installation.

**2) Preparation**

- De-energize the system where necessary and relieve the water pressure in the piping.
- Close any shut-off valves in the bypass/sampling line and ensure that there is no pressure on the vessel during installation.

**3) Mounting the bracket**

- Position the sampling vessel on the wall and mark the drill holes.
- Securely mount the wall bracket using appropriate anchors/screws for the wall type.
- Check that the vessel cannot twist after installation due to the weight of the pipes or sensors.

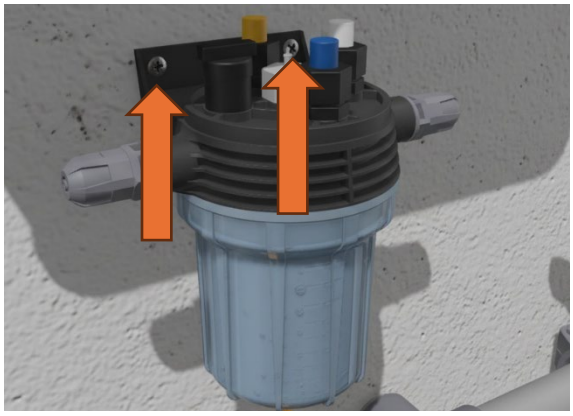

**4) Secure the vessel**

- Secure the sampling pot to the bracket and check:
  - That the jar is level and stable;
  - That the transparent cup can rotate freely for disassembly.

**5) Connecting pipes**

- Connect the inlet and outlet pipes according to the installation's bypass/sampling diagram.
- Use proper seals (e.g., appropriate O-rings/couplings; if threaded: seal according to your standard, such as PTFE).
- Avoid mechanical stress on the connections: pipes must be **stress-free** where they connect to the vessel.

**6) Venting, filling, and leak check**

- Slowly open the valves and allow the vessel to fill.
- Check all couplings, the bowl, and the rim of the lid for leaks.
- Let the water flow briefly and check again. If in doubt: relieve pressure, disassemble, and check the seal.

**7) Secure service position**

- After assembly, check that:
  - the cup can be removed from the bottom for cleaning;
  - the installation remains accessible for maintenance

## 9¡0¡7.Installation.of.the.electrodes.and.sensors

**Important:** Exercise extreme caution when working with sensors. Chlorine and acid sensors contain fragile, handcrafted glass components and can be damaged immediately if installed incorrectly.

**Prevent damage:**

- Never force a sensor through the gland of the electrode holder.
- Never pry the storage solution bottle off the sensor.
- Do not use force or make sideways movements when installing the sensor.
- Always prevent the sensor from being bumped, struck, or dropped.

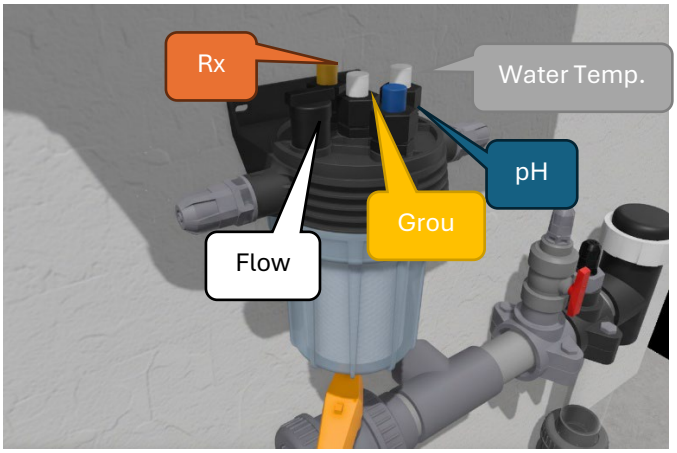


For proper installation, follow the steps below:

1. **Remove the storage cap** and store it carefully for later use (e.g., when preparing for winter).
    - First, fully unscrew the cap from the retaining ring.
    - Only then remove the retaining ring from the sensor.
2. **Unscrew the gland** completely off the electrode holder.
3. **Slide the parts over the sensor** in the correct order:
    a. At the grounding point, the gland must be screwed over the thickened section

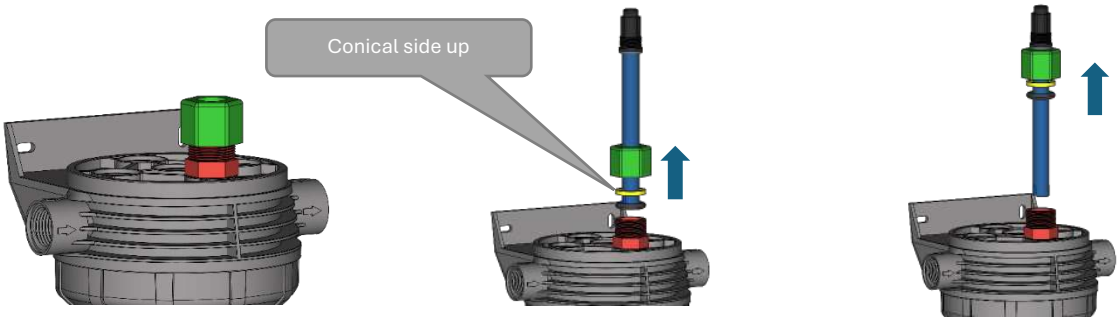


4) Insert the electrode as deeply as possible into the electrode holder and tighten the gland firmly by hand. Please note ! Do not overtighten the gland with a wrench or other tool. Electrodes that are tightened with excessive pressure will have a shorter service life.

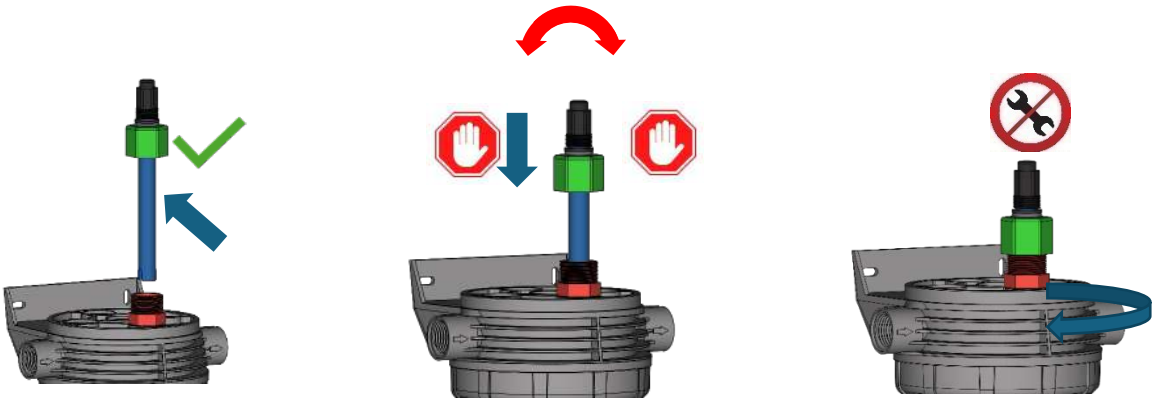

## 9¡0¡8.Installation.of.the.outdoor.temperature.sensor

The air temperature sensor must be mounted **outdoors** in a location where the sensor can measure the **actual outdoor temperature** .

**Important:** Always place the sensor **in the shade** and out of direct sunlight. Direct sunlight can affect the measurement and cause an incorrect temperature reading.

To protect the installation from frost, it is recommended to mount the sensor in a **sheltered outdoor location** , for example:

- On the north side of a building;
- Away from heat radiation from windows, heat pumps, or ventilation outlets.
- Preferably at or around waist height

Ensure that the sensor **is not directly exposed to rainwater** and that the cable is neatly concealed to prevent damage.

## 9¡0¡9.Installation.of.dosing.pumps

There are two options for the dosing pumps.

1. Compact
2. Wall mount

If you have the compact version, the dosing pumps can be mounted on the side of the Norsup ONE V3.

Blind plugs are factory-installed on the side of the housing.

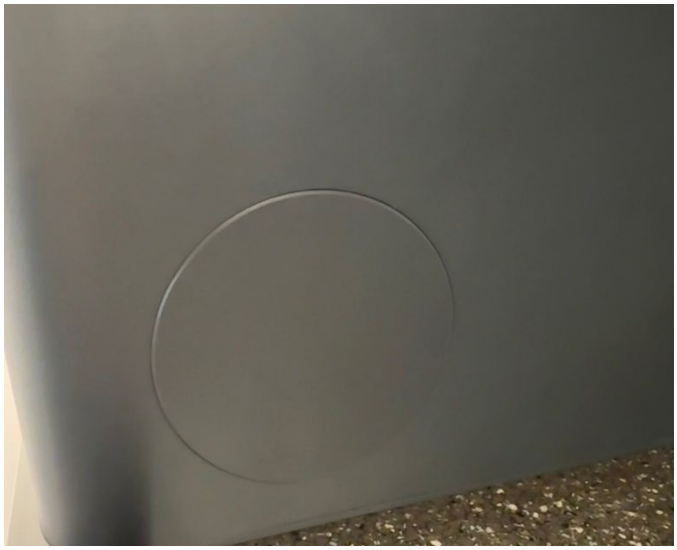

Turn the blind plug a quarter turn until it comes loose from the housing.

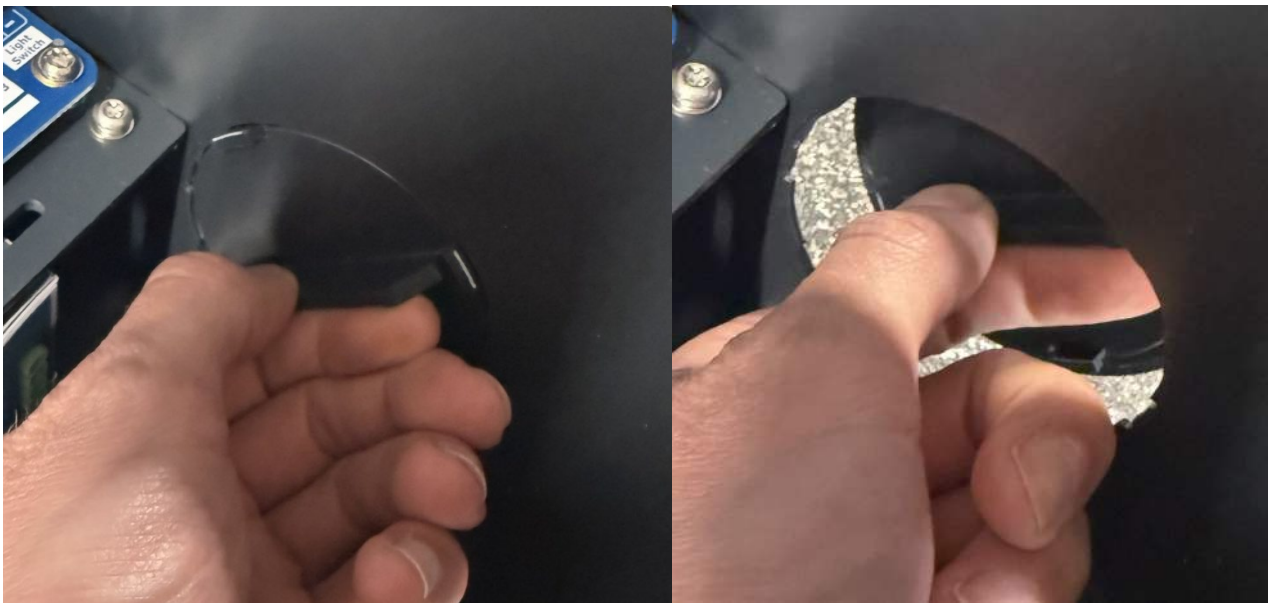


Then take the dosing pump with the compact bracket. This can be mounted in the opposite manner.
Place the dosing pump against the housing at an angle of approximately 45 degrees so that the back rests flush against the housing.
Then carefully rotate the dosing pump until it stands upright and clicks into place.

Next, connect the dosing pump electrically to the correct outputs. Set the Cl dosing pump to ‘Rx power’ and the pH dosing pump to ‘pH power’.

With a wall-mount kit, the dosing pump must be securely mounted on the wall.

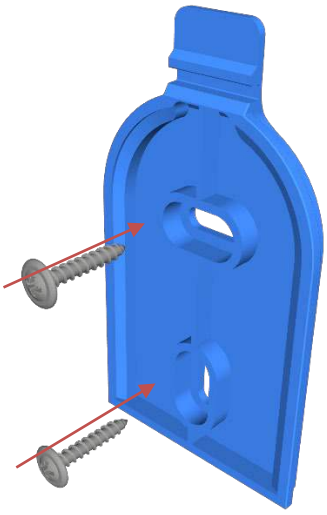

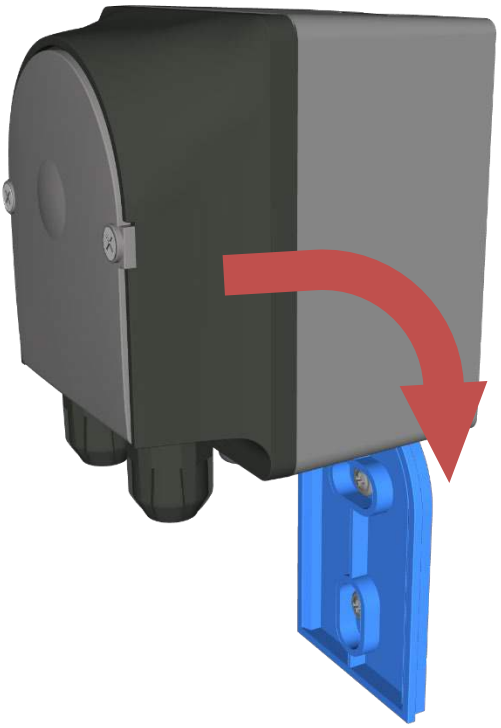

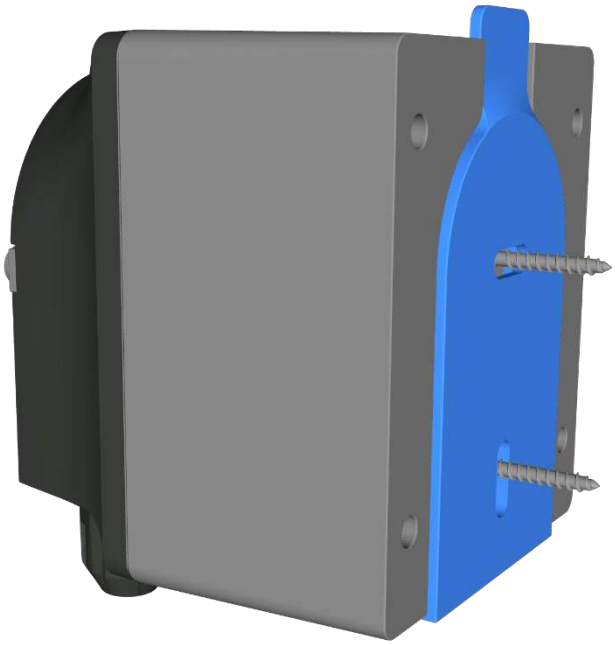

# 4. Electrical Installation of the Norsup ONE V3

- The general safety instructions described in Chapter 1 apply in full to this chapter.
- The electrical installation of the Norsup ONE V3 must only be performed by technically qualified personnel. Prior to any installation, maintenance, or repair work, the unit must be completely de-energized.
- Never remove protective covers or guards from the unit or connected equipment. Touching internal components can result in electric shock and/or damage to the system.
- In the event of a malfunction or anomaly, such as smoke or the smell of burning, the power supply must be disconnected immediately.
- The system must be installed in a dry environment protected from the elements and always connected via a suitable ground fault circuit interrupter.

## 4.1 Wire End Sleeves

If the connection cables have a **flexible core** , the wires must be fitted with **wire end ferrules**. This ensures a **reliable and durable connection** and prevents loose contacts or damage to the wire.

It is technically possible to connect flexible conductors without wire end ferrules by pressing the **white button** on the terminal block with a screwdriver, but this is **not recommended**. Without a ferrule, the connection is more susceptible to coming loose and malfunctions.

## 4.2 Electrical Overview

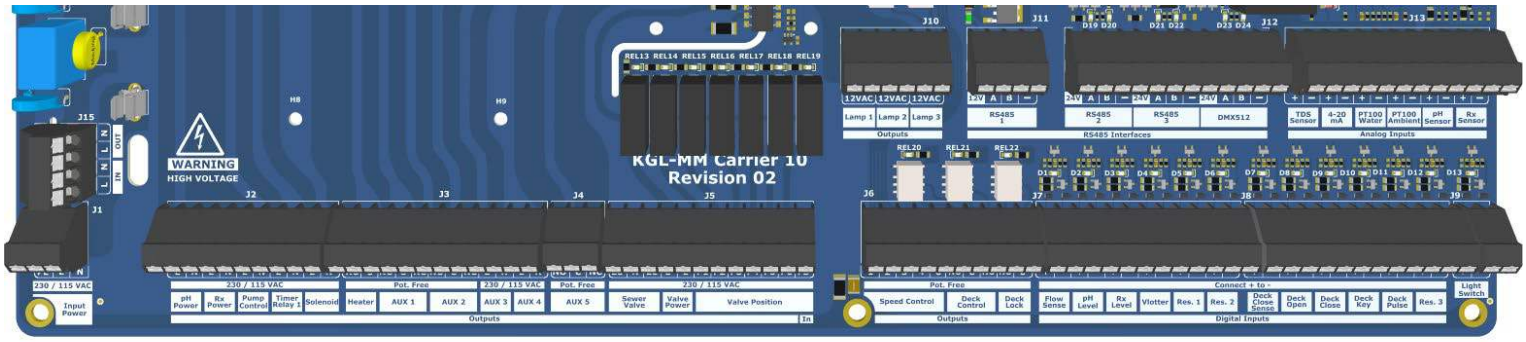


| Output | Number of Contacts | Current @230 VAC [A] |
|---|---|---|
| pH Power | 2 | 0,3 |
| Rx Power | 2 | 2 |
| Timer Pump 1 (AUX 6) | 2 | 0,5 |
| Pump Control | 2 | 8 |
| Solenoid | 2 | 0,2 |
| Central Heating | 2 | Potential-Free-s (max 5A @230VAC) |
| Sewer Valve | 3 | 0,5 |
| Aux 1 | 3 | Potential-Free |
| Aux 2 | 3 | Potential-Free |
| Aux 3 | 2 | 1,5 |
| Aux 4 | 2 | 1,5 |
| Aux 5 | 3 | Potential-Free |
| Valve Power | 2 | 0,5 |
| Valve Position | 6 | |
| Speed Control | 5 | Potential-Free |
| Deck Control | 2 | Potential-Free |
| Deck External Control | 3 | Potential-Free |
| Lighting Output 230VAC | 2 | 0,5 |
| Lighting Output 12VAC | 6 | - |
| General<br>- Carrier PCBA<br>- Covco Control Power<br>- Display Power | - | 0,5 |
| | | |
| Total | | 16 |

## 4.3 Connection of filter pumps

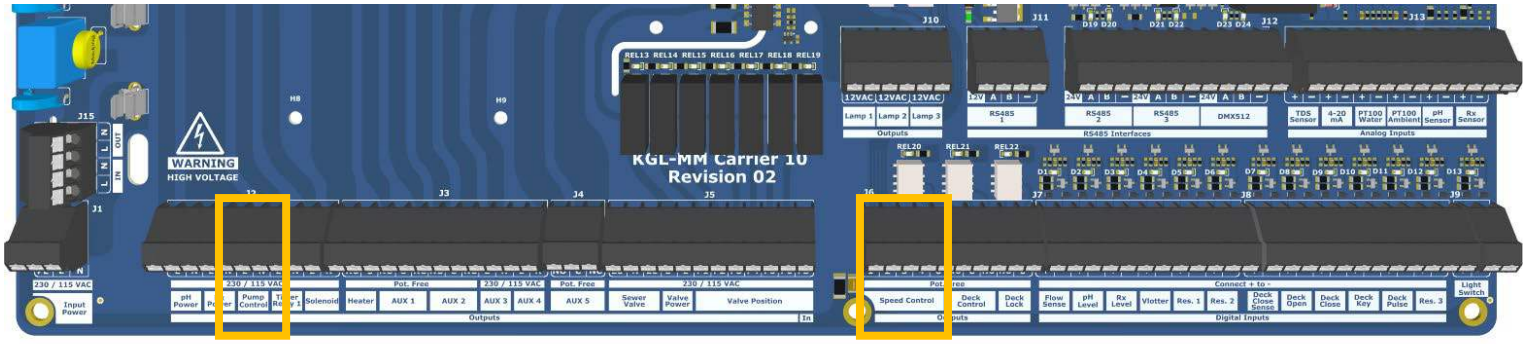


**Safety and Responsibilities**

The Norsup ONE V3 primarily functions as a control and switching device for external equipment, including filter pumps. The Norsup ONE V3 is **not a primary safety device** for the filter pump and in no way replaces the safety devices required by the manufacturer or installer.

The filter pump must always be independently protected against, among other things, short circuits, blockages, dry running, overheating, and hydraulic failures, in accordance with the manufacturer's instructions and applicable standards. The correct and safe operation of the filter pump is entirely the responsibility of the pump manufacturer, the installer, and/or the user.

The Norsup ONE V3 features **auxiliary, signal-dependent functions**. These functions are intended solely as **a secondary layer of protection** and should **not be considered a fail-safe or primary protection**.

The operation of these auxiliary functions depends on correct installation, configuration, and reliable external signals. Malfunctions, incorrect settings, defective sensors, or improper installation may cause these functions to fail to respond or to respond too late.

Norsup accepts no liability for damage to the filter pump or consequential damage resulting from the absence or failure of primary safety devices, incorrect installation, faulty configuration, or failure to follow the instructions of the pump or installation supplier.

Always follow the documentation and safety instructions for the relevant filter pump and other connected equipment during installation and use.

## 0¡9¡7.Single.speed?filter.pump.power.supply¿

**Important:** Most filter pumps without frequency control have limited safety features

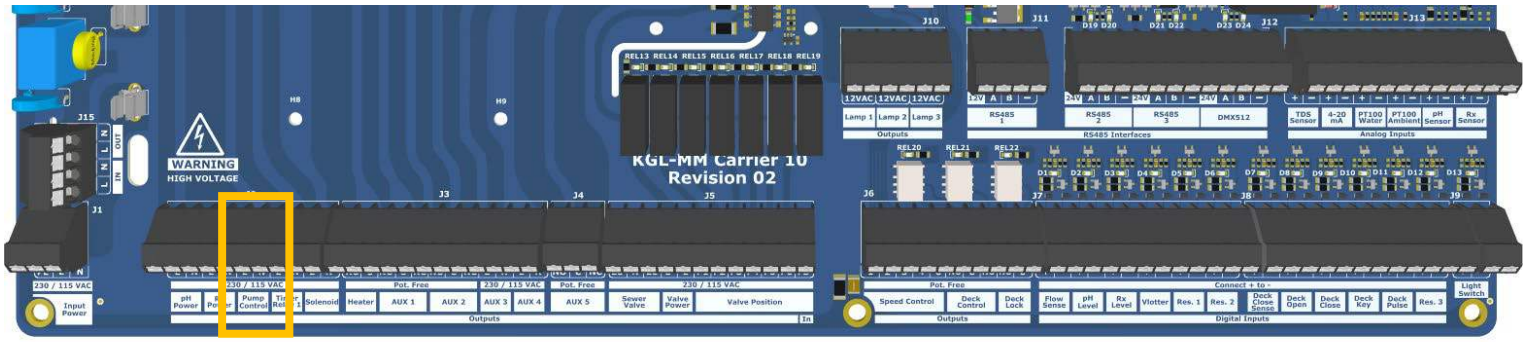

## 0¡9¡8.Pentair.SuperFlo~~-Whisperflo.VS-VS~~8.

In addition to the power supply as described in the 'electrical overview,' the communication cable must be connected. The terminal blocks are located on the right and are shown below.

- To activate external control mode:
  1. Stop the pump by pressing the Start/Stop button.
  2. Activate "external control" mode by holding down the Start/Stop button for 10 seconds.
  3. If successful, the LED next to Ext. Control Only will light up. See Figure 7.
  4. The Start/Stop button must be pressed again to allow the pump to run.
- Turn off prime mode:
  - Once priming has started, the speed can be adjusted between 3450 and 1700 RPM using the "+" and "-" arrows. If it is set below 1700 RPM, priming mode is disabled and the pump immediately starts running at the set speed.

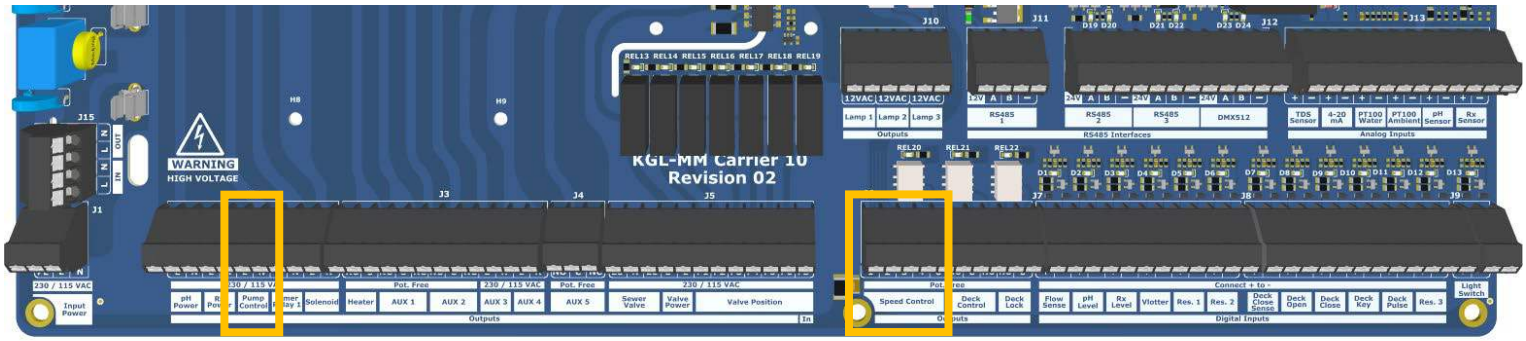


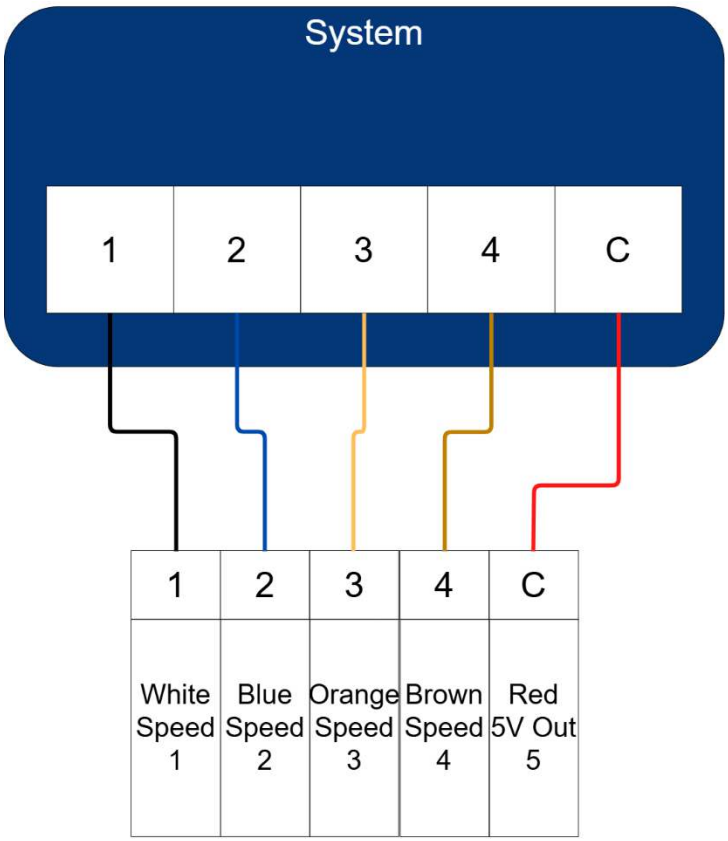


| Definition | Signal Range | Wire Color | |
|---|---|---|---|
| | | Wiring Kit 353129Z Almond | Wiring Kit 356324Z Black |
| +5V Output for Digital Inputs | 0-20mA | Red | Red |
| RS-485 A | -7V to +12V | - | Yellow |
| RS-485 B | -7V to +12V | - | Green |
| SPEED 1 Digital Input | 0, 5-30V AC/DC | Green | White |
| SPEED 2 Digital Input | 0, 5-30V AC/DC | Yellow | Blue |
| SPEED 3 Digital Input | 0, 5-30V AC/DC | Orange | Orange |
| QUICK CLEAN Digital Input | 0, 5-30V AC/DC | Brown | Brown |
| Common Ground | 0V | Black | Black |

## 0¡9¡9.Pentair.IntelliFlo–WhisperFlo

In addition to the power supply as described in the 'electrical overview,' the communication cable must be connected. The terminal blocks are located on the right and are shown below.

- To activate external control mode:
  1. Stop the pump by pressing the Start/Stop button.
  2. Activate "external control" mode by holding down the Start/Stop button for 10 seconds.
  3. If successful, the LED next to Ext. Control Only will light up. See Figure 7.
  4. The Start/Stop button must be pressed again to allow the pump to run.
- Turn off prime mode:
  - Once priming has started, the speed can be adjusted between 3450 and 1700 RPM using the "+" and "-" arrows. If it is set below 1700 RPM, priming mode is disabled and the pump immediately starts running at the set speed.

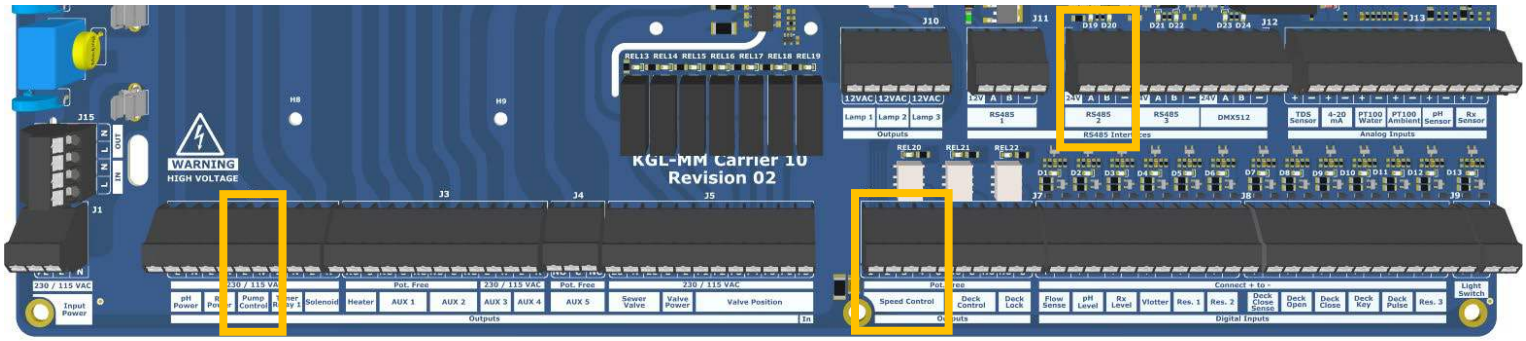


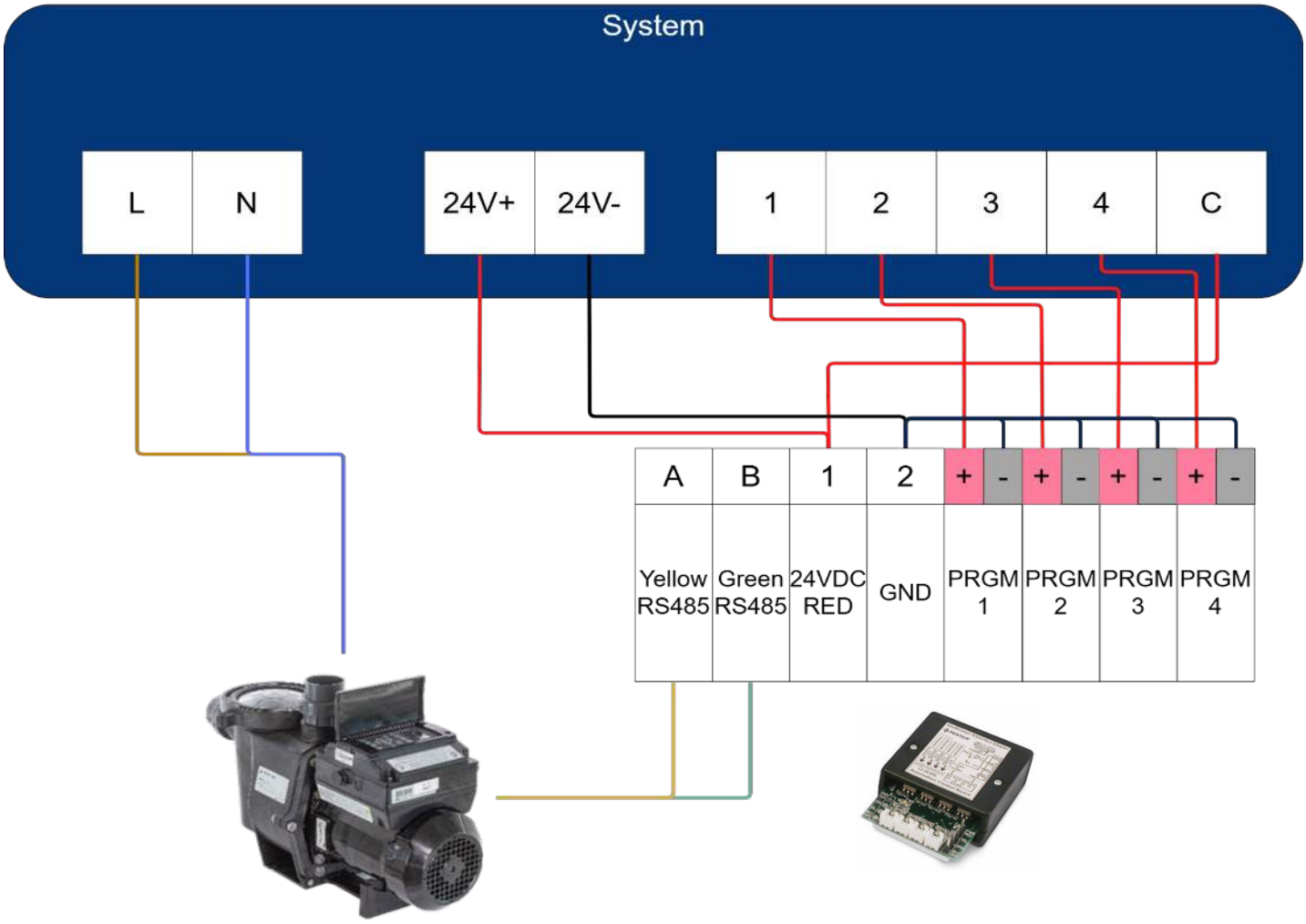

## 0¡9¡0.Pentair.IntelliFlo.9

Configuration: Intelliflo

In addition to the power supply as described in the 'electrical overview,' the communication cable must be connected. The terminal blocks are located on the right and are shown below.

Note: If the pump has been stopped via the ON/STOP button (ON/STOP LED is solid red), the ON/STOP button must be pressed again before the pump will operate. When a low-voltage signal is received by a digital input on the control panel, the pump will execute the program set for that specific digital input. This digital input program will override all scheduled programs, automation, or manual inputs.

To adjust the preset speeds for programs 1 through 4, follow the IntelliFlo 3 manual.

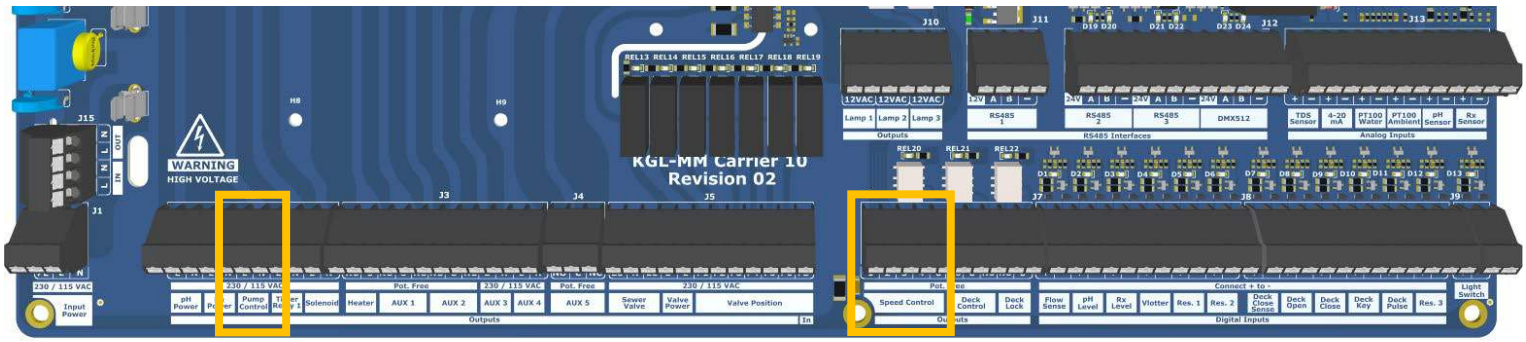


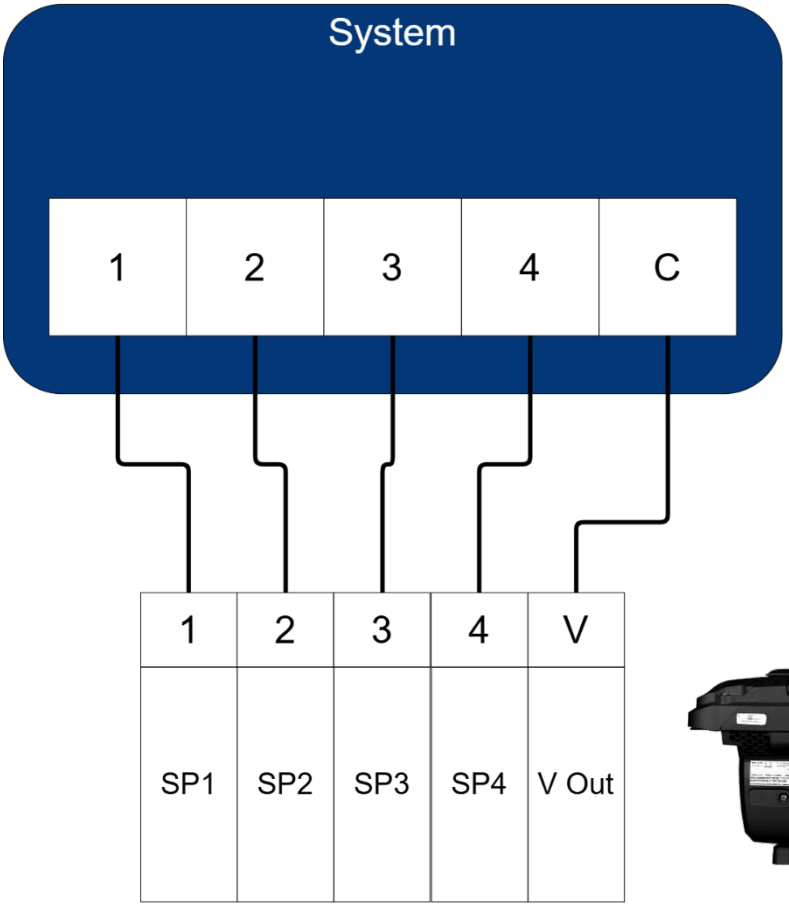

## 0¡9¡❶Speck.BADU.Eco.Touch?ECO.VS?Norsup.EVO.PRO?Starline.inverter.

Configuration: STL-1

In addition to the power supply as described in the 'electrical overview,' the communication cable must be connected. The terminal blocks are located on the right and are shown below.

Turn off prime mode!

1. Press and hold the S button for 3 seconds
2. Press the info button until you see the 't' setting
3. Set this setting to 0 (t oFF) and press 's'
4. Use the info button to go to setting E
5. Change the setting to dI (digital input)
6. Press 's'

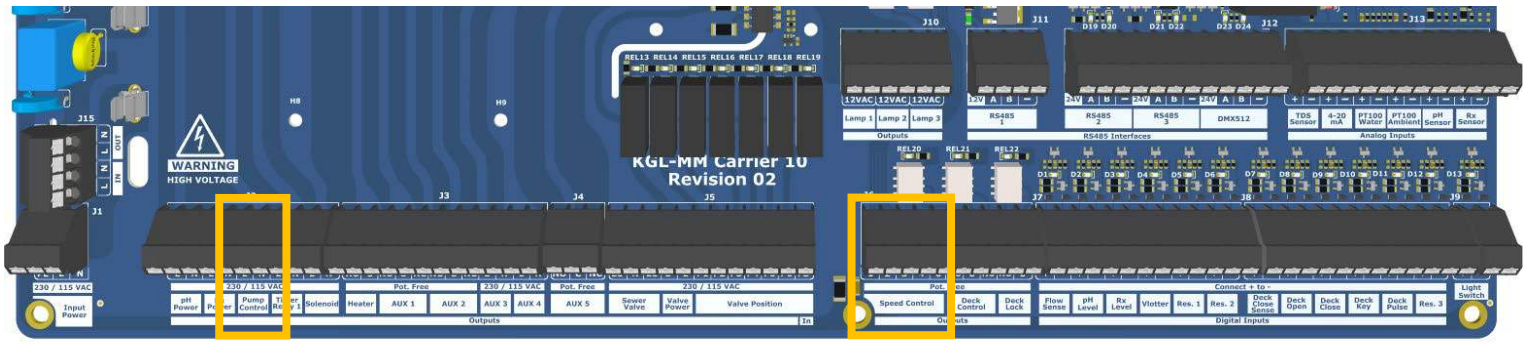


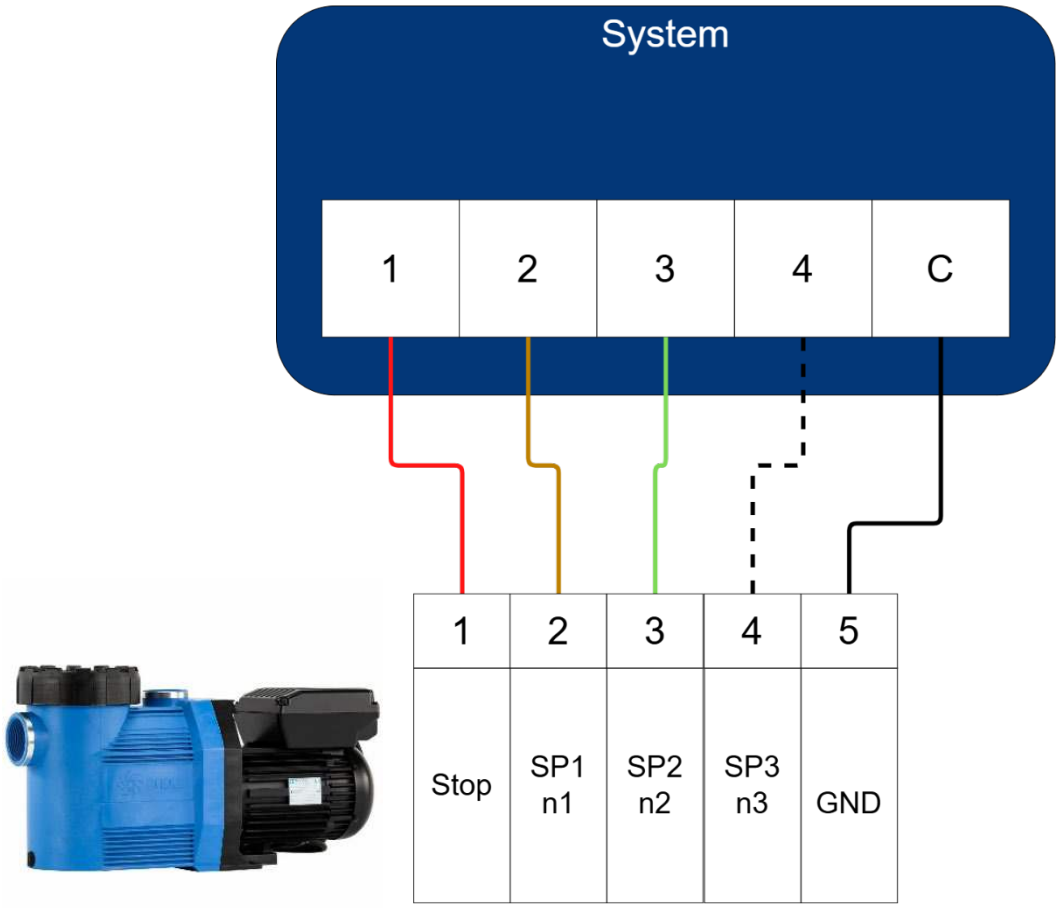

## 0¡9¡❷Norsup.EVO.PRO.

Configuration: STL-1

In addition to the power supply as described in the 'electrical overview,' the communication cable must be connected. The terminal blocks are located on the right and are shown below.

Turn off prime mode!

1. Press and hold 'Set' for 3 seconds until 'setup' appears
2. By briefly pressing 'set', you go to the next parameter. This can be adjusted using the up/down arrow:

| **Time** | |
|---|---|
| T1 | OFF |
| T2 | OFF |
| T3 | OFF |
| T4 | OFF |
| T5 | OFF |
| Adr | Nvt |
| Pr | OFF |
| SF | OFF |
| E | ON |
| - | OFF |

3. Scroll down to 'store' and the data will be saved.

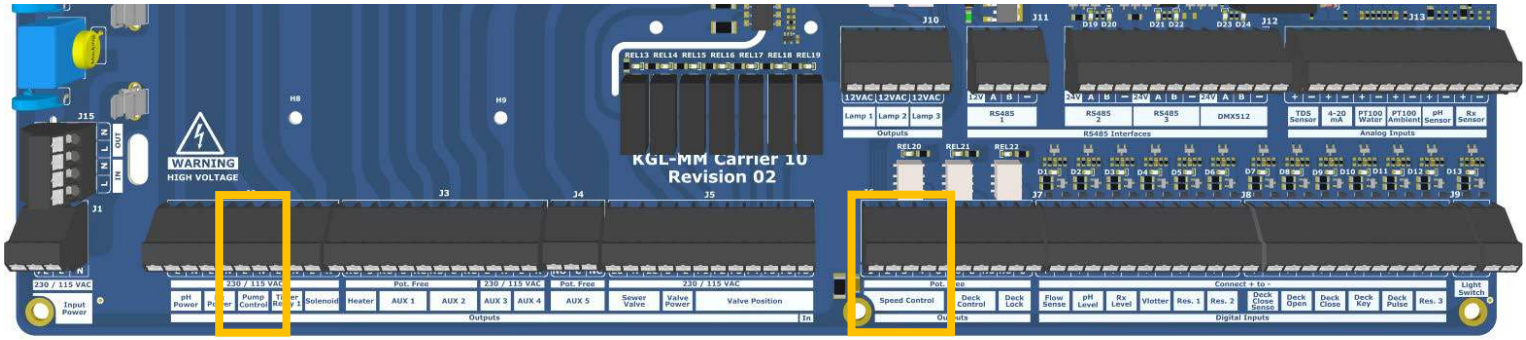


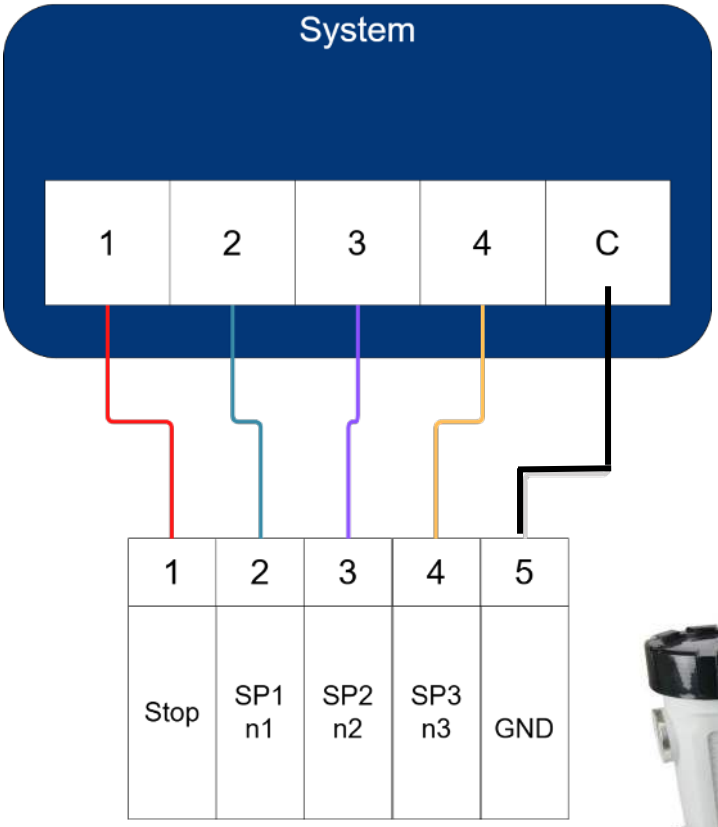

## 0¡9¡❸Davey.

Turn off prime mode!

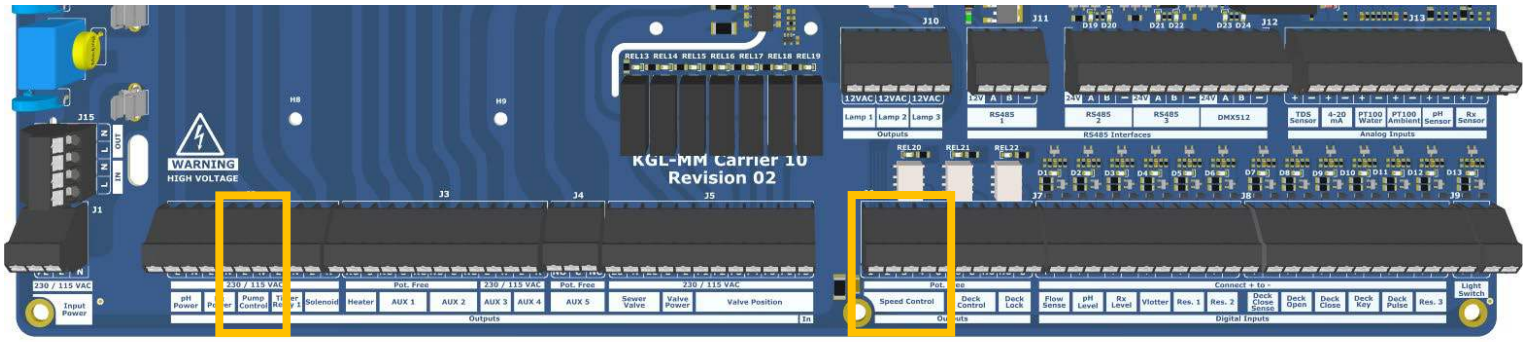


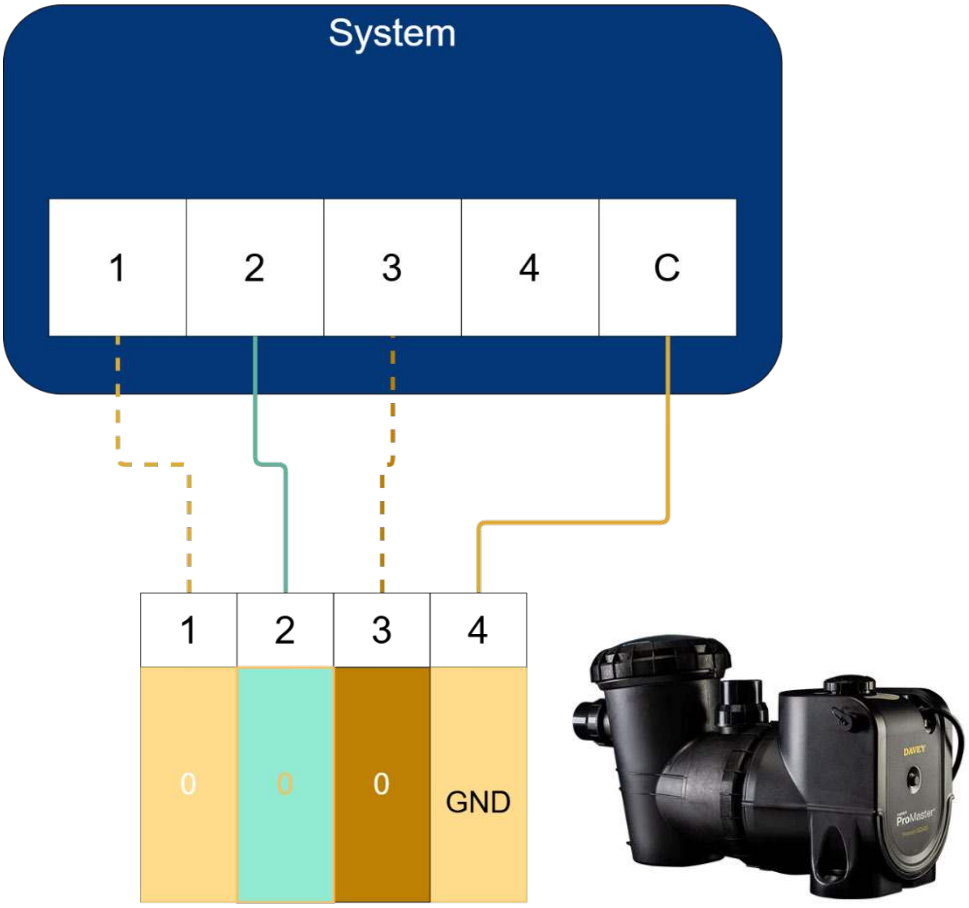

## 0¡9¡❹Optidrive.e8

Terminal mode P-12=0, P-15=2 (See Invertek manual H7.1)

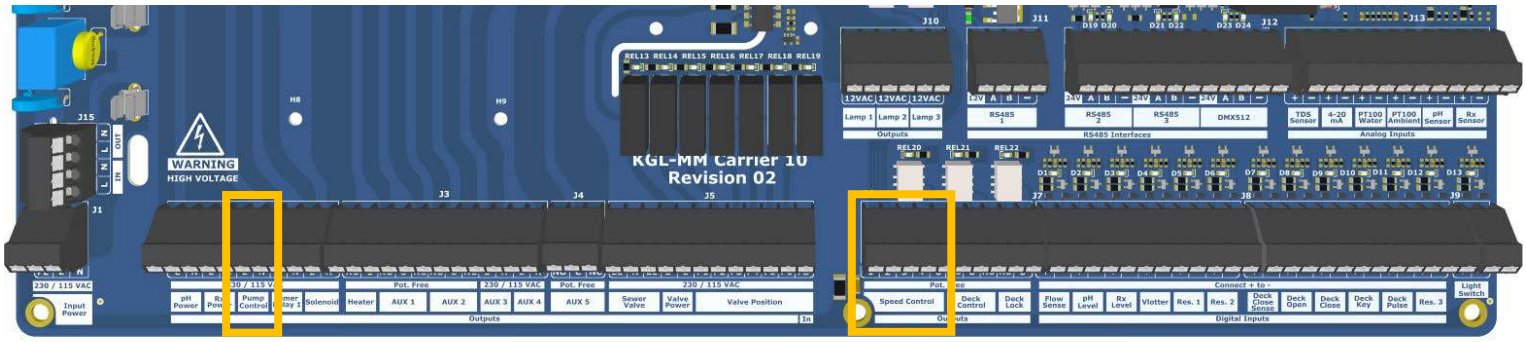


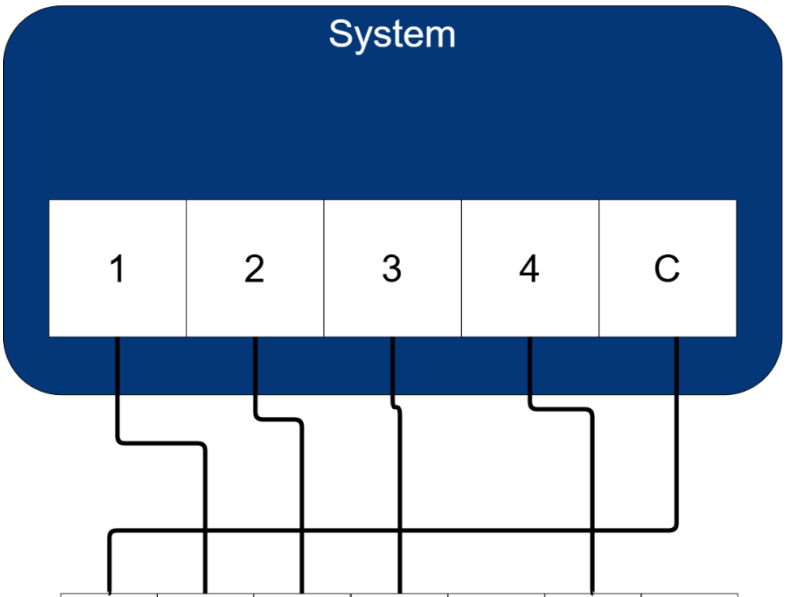

| 1 | 2 | 3 | 4 | 5 | 6 | 7 |
|---|---|---|---|---|---|---|
| 24V | Run (Eneble) | Preset speed 1-4 Select | Preset speed 1-4 Select | | Preset/ Max<br><br>Unused | |

## 0¡9¡❺Hayward.VSTD

Configuration on Norsup ONE V3: Hayward VSTD

In addition to the power supply as described in the 'electrical overview,' the communication cable must be connected. The terminal blocks are located on the right and are shown below.

Turn off prime mode!

The digital inputs can be used in manual or timer mode. They are at the highest priority level: they are MASTER of all functions used. Only the Run/Stop and DISP/FUNC buttons remain active. When a digital input is used, the LED linked to that input flashes rapidly (DI1 = V1, DI2 = V2, or DI3 = V3).

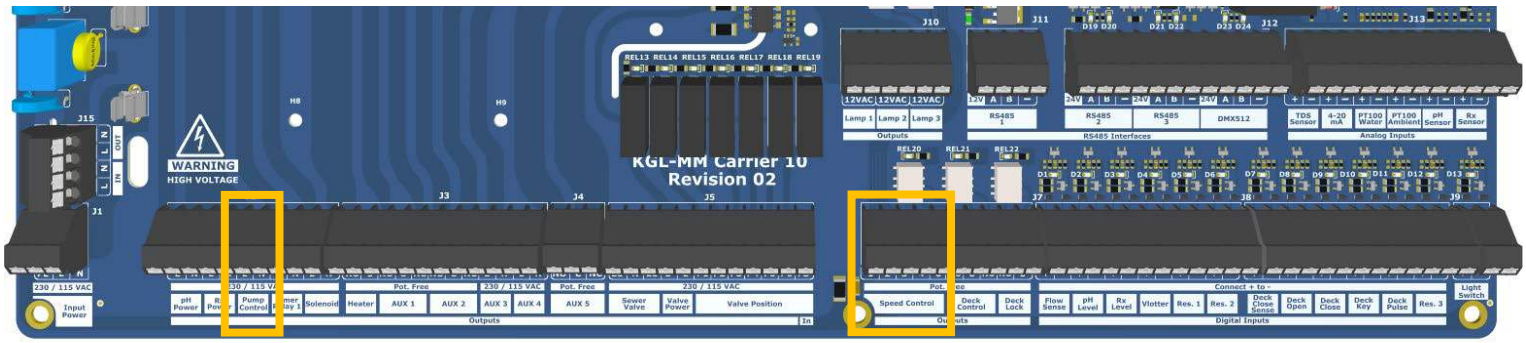


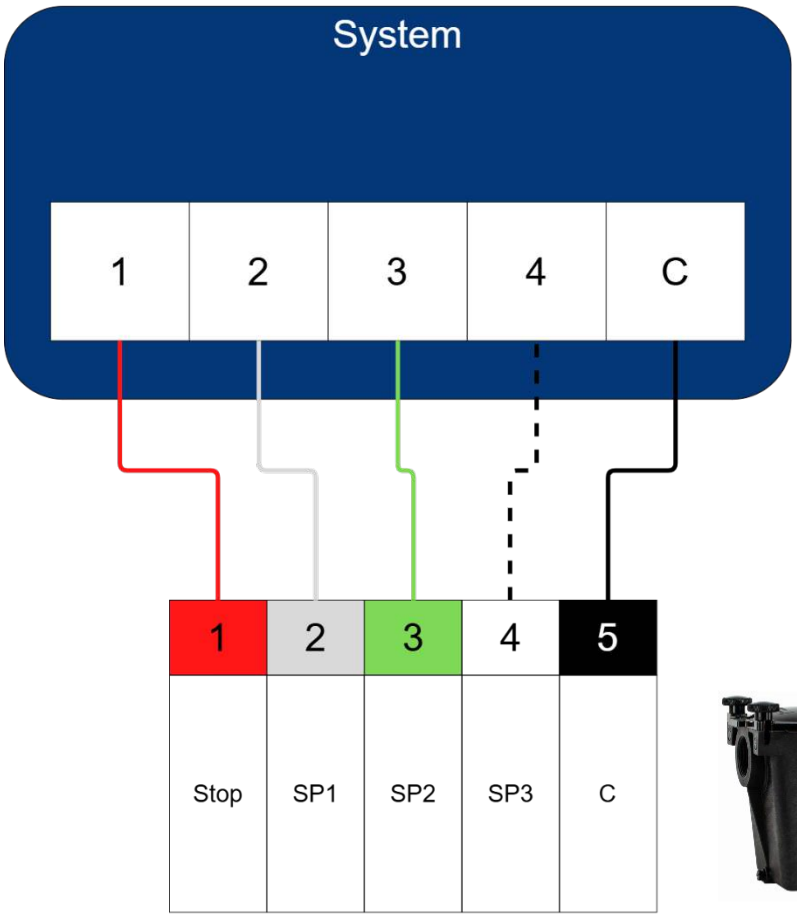

## 0¡9¡76.DAB.E_swim

Configuration on Norsup ONE V3: DAB E-swim (or Zodiac FloProVS)

In addition to the power supply as described in the 'electrical overview,' the communication cable must be connected. The terminal blocks are located on the right and are shown below.

Follow the steps in the DAB E-swim manual under 6C. External control

Turn off prime mode!

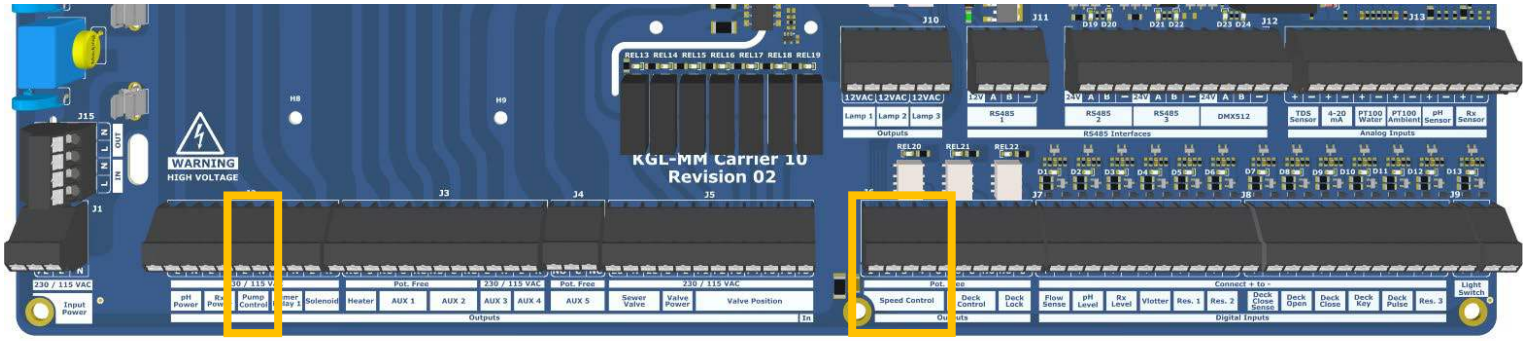


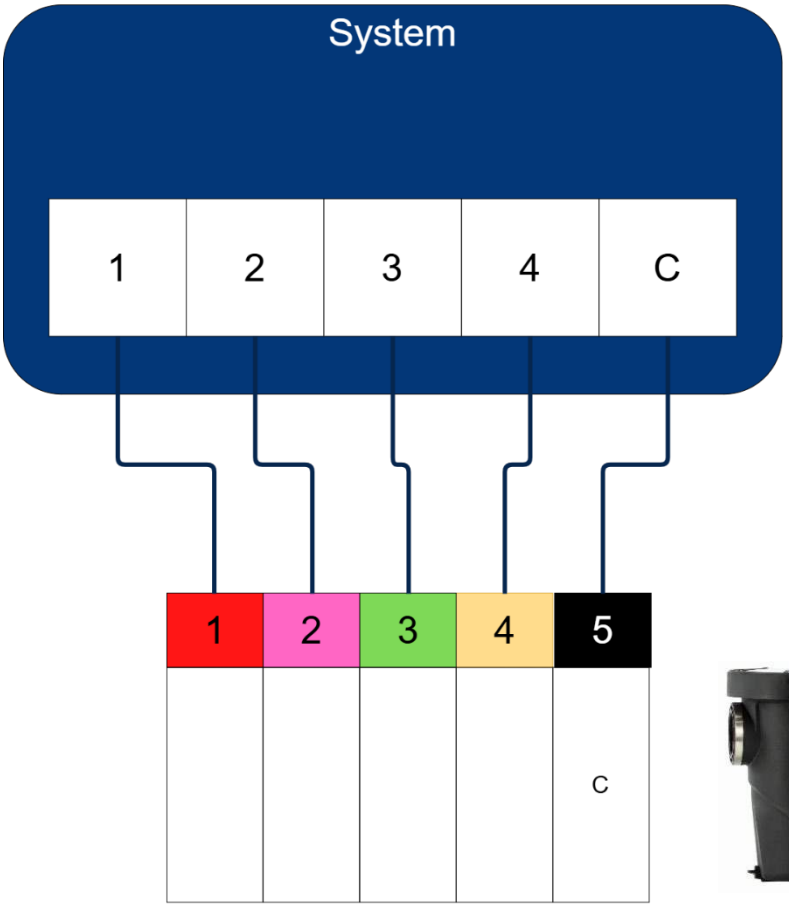

## 0¡9¡77.Aquagem.inverter.pool.pump. (also.known.as¿xflow?inverstar?inverco?AquaSphere.Eco.IVS?inverpro?inversilence)

Turn off prime mode!

Configuration: Inverpro (or STL-1)

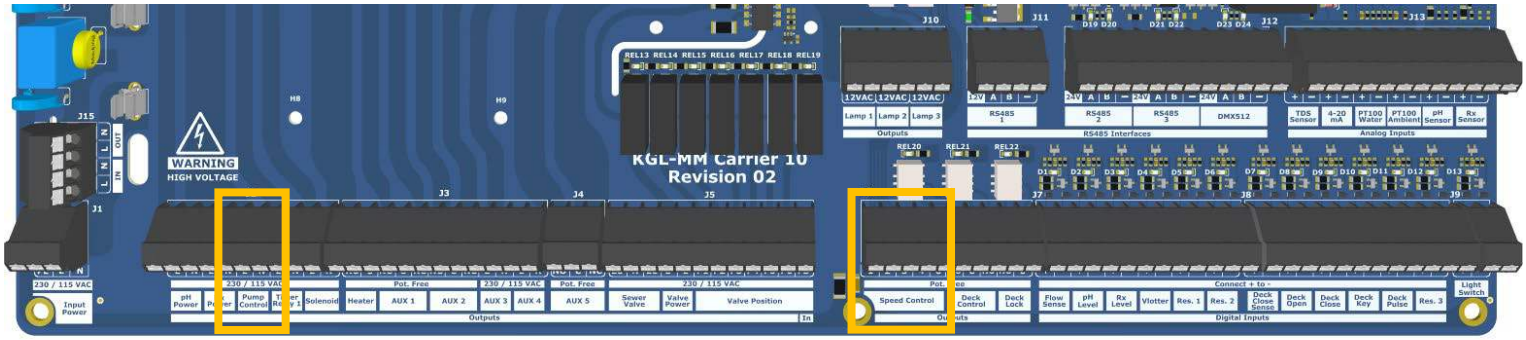


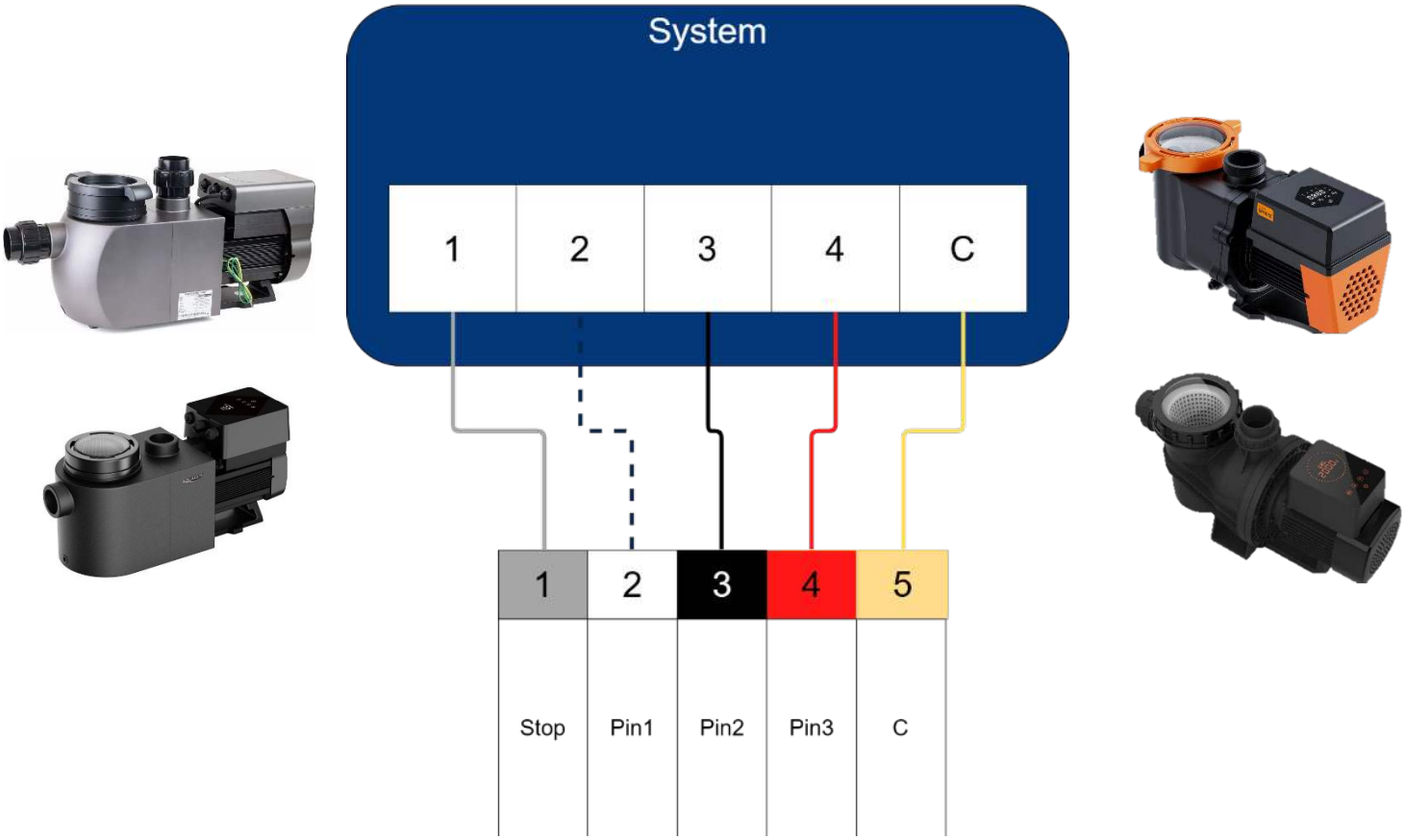


1. Turn off the pump using the on/off button
2. Press and hold the arrow keys simultaneously
3. Enter a speed (%) for program 1 using the arrow keys
4. Press and hold the arrow keys simultaneously
5. Enter a speed (%) for program 2 using the arrow keys
6. Press and hold the arrow keys simultaneously
7. Enter a speed (%) for program 3 using the arrow keys
8. Press and hold the arrow keys simultaneously
9. Enter a speed (%) for program 4 using the arrow keys (not used)
10. Press and hold the arrow keys simultaneously
11. Set the prime mode to 0 to disable it
12. Wait until the screen returns to the main menu

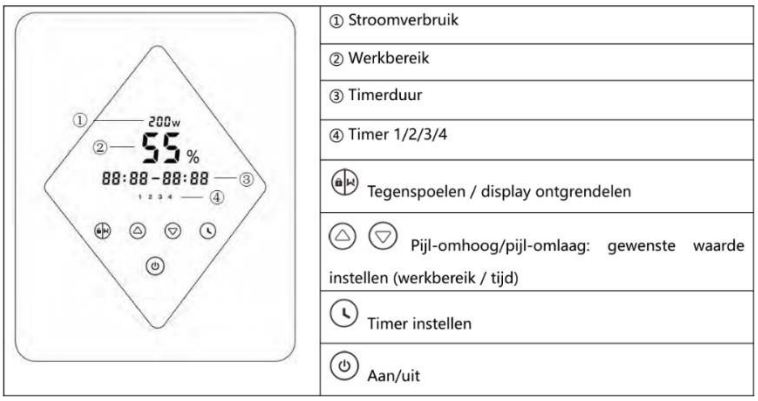

## 4.4 Chemical Water Treatment Connections

**Safety and Responsibilities**

The Norsup ONE V3 functions as a central control and regulation unit for external dosing pumps for pH and Redox correction. Many dosing pumps do not have extensive safety features of their own; the Norsup ONE V3 therefore handles the control and limiting of the dosing based on measured values and system conditions.

The Norsup ONE V3 features **software-based, signal-dependent safety functions**, including:

- Dosing shutdown when there is no water flow;
- Disabling dosing when the filter pump is not in operation;
- Limiting the maximum dosage within a set time period;
- Prevention of simultaneous dosing of pH and Redox correction;
- Stopping dosing when measured values fall outside a normal range, for example in the event of sensor malfunctions.

These functions are intended as **support and risk mitigation**, but **do not** constitute a fail-safe or absolute guarantee against incorrect dosing or chemical incidents. Operation depends on correct installation, proper settings, properly functioning sensors, and regular maintenance.

The user and installer remain responsible for monitoring measured values, calibrating and replacing electrodes, and adhering to the maintenance instructions as described in 2.2 Onderhoud.

Norsup accepts no liability for damage or consequential damage resulting from sensor errors, incorrect configuration, insufficient maintenance, or failure to comply with the instructions of manufacturers of dosing pumps and chemical products.

| Output | Number of Contacts | Current @230 VAC [A] |
|---|---|---|
| pH Power | 2 | 0,3 |
| Rx Power | 2 | 2 |
| Timer Pump 1 (AUX 6 in system) | 2 | 0,5 |

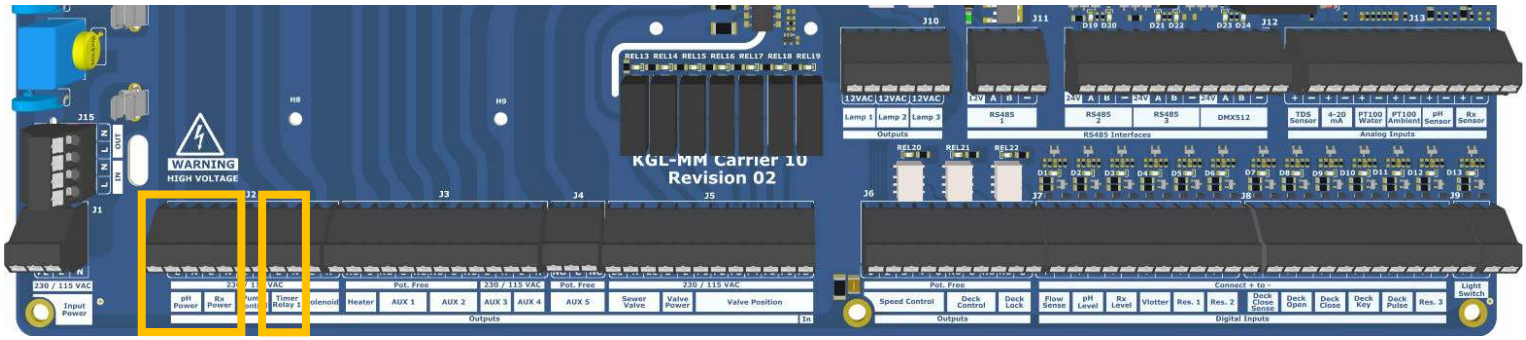


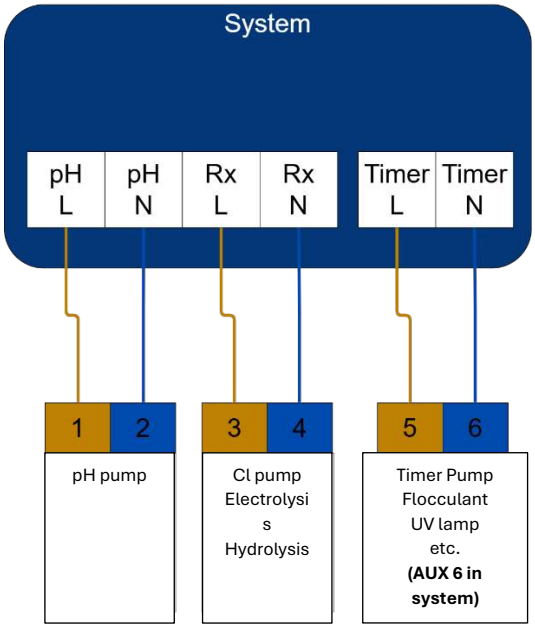

## 0¡0¡7.Connecting.the.pH?Rx?TDS.sensor

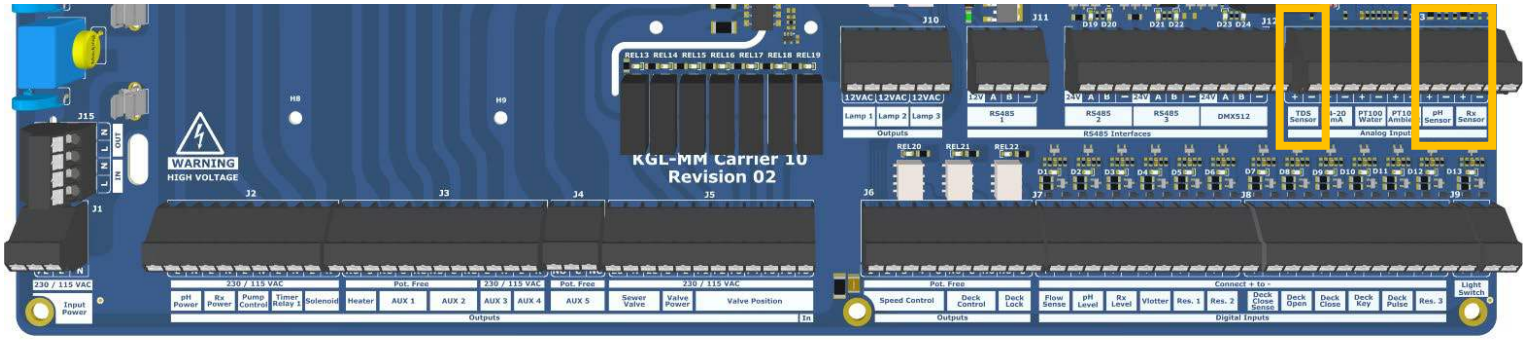


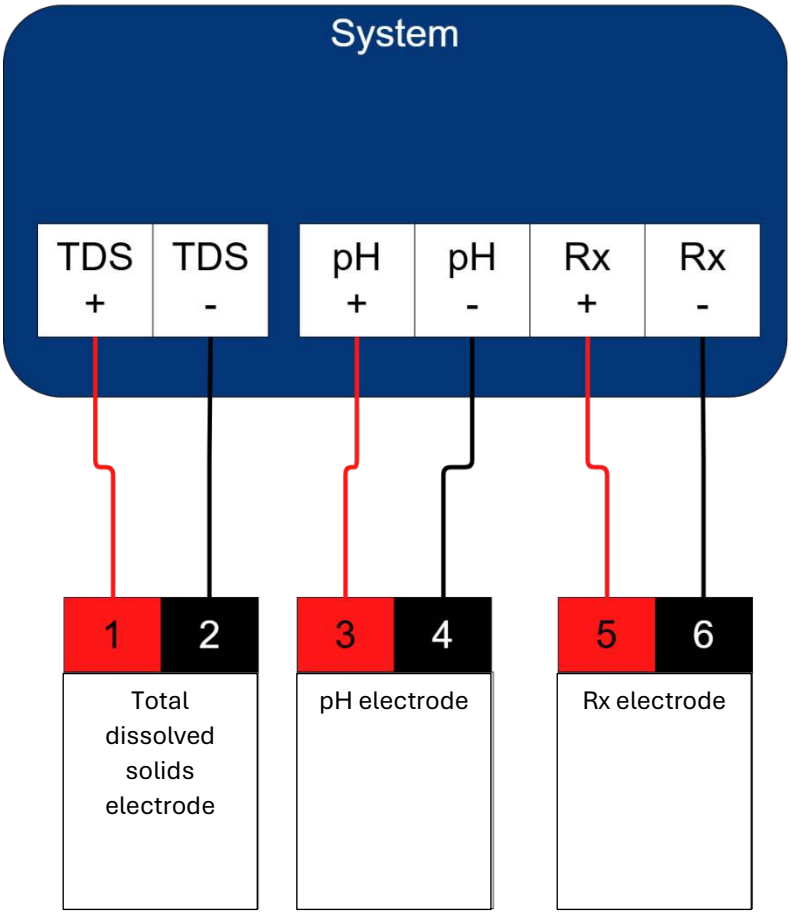


The sensor cables are marked with a **red** and **black** tag to indicate polarity:

- **Red = +**
- **Black = –**

Once the electrode is fully installed, the electrode cable connector can be placed **on top of the electrode** . Press the connector **straight down** onto the electrode and then tighten the **plastic sleeve** .

Make sure that **no lateral forces** are applied to the electrode. This can damage the electrode or cause leakage.

## 0¡0¡8.Connecting.the.flow.sensor.and.low_level.alarms-suction.lance

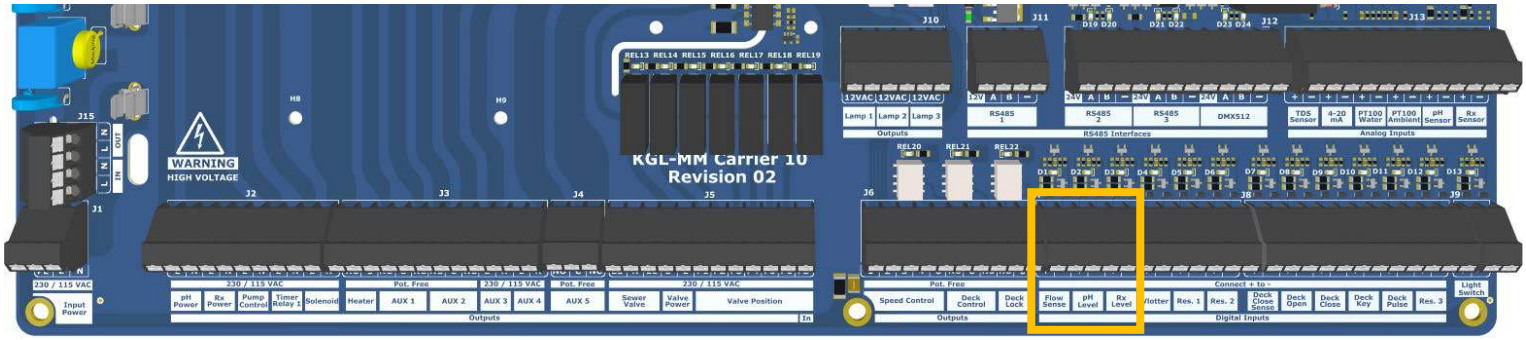


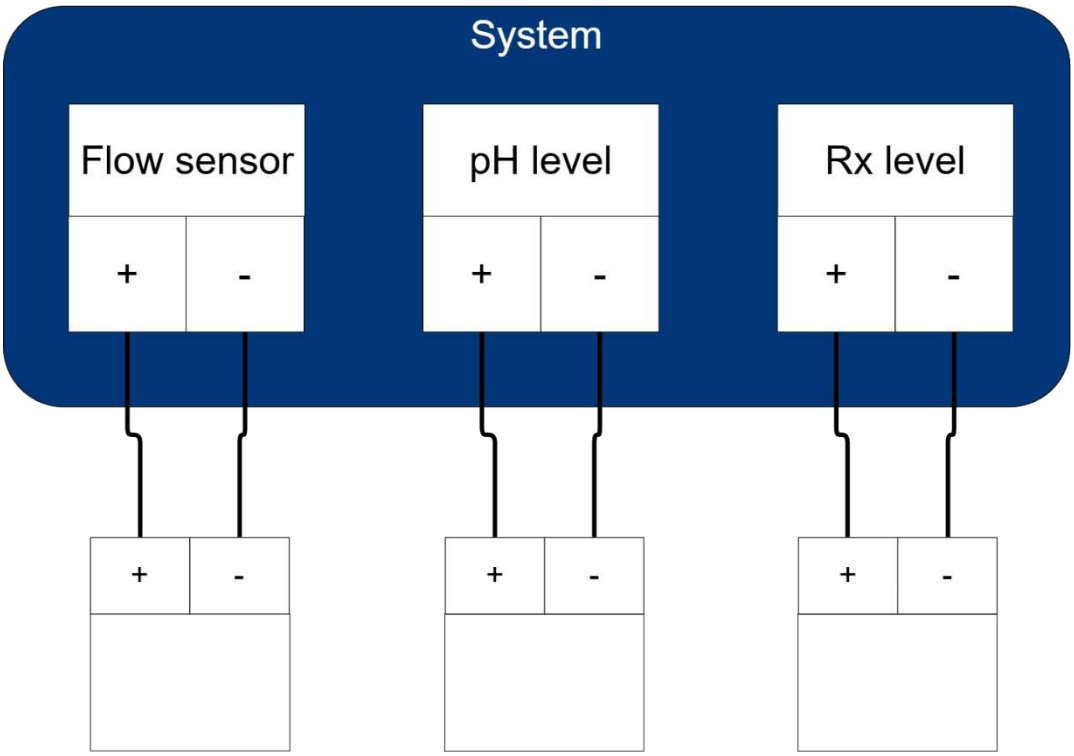

## 4.5 Heating

**Safety and Responsibilities (Heating)**

The Norsup ONE V3 functions as a central control and regulation unit for external heating equipment, such as heat pumps, electric heaters, central heating heat exchangers, solar-controlled systems, or external control valves. The Norsup ONE V3 is not a primary safety device for heating equipment and in no way replaces the safety devices required by the manufacturer or installer.

The heating system must always be independently protected against, among other things, overheating, dry running, insufficient flow, pressure issues, risk of freezing, electrical overload, and hydraulic malfunctions, in accordance with the manufacturer's instructions and applicable standards. The correct and safe operation of the heat source and the hydraulic system is entirely the responsibility of the manufacturer of the heating equipment, the installer, and/or the user.

The Norsup ONE V3 features supporting, signal-dependent functions that can switch and limit the heat demand, such as:

- Activating heating based on the set water temperature (setpoint control);
- Blocking or switching off heating when the filter pump is not in operation;
- Blocking heating in case of insufficient or absent water flow (if a flow signal is present);
- Applying hysteresis and switching times to limit oscillation;
- Disabling the heat demand in case of unrealistic measured values or sensor failures (depending on configuration).

These functions are intended solely as a secondary layer of protection and support for control and energy management. They should not be considered fail-safe, primary protection, or an absolute guarantee against malfunctions, damage, or hazardous situations.

The operation of these support functions depends on correct installation, proper configuration, and reliable external signals, such as temperature measurements, flow switches, pump status, valve positions, external safety devices, and control interfaces from the heat source. Malfunctions, incorrect settings, defective sensors, improper installation, or incompatible equipment may cause these functions to fail to respond or to respond too late.

Norsup accepts no liability for damage to heating equipment or consequential damage resulting from the absence or failure of primary safety devices, incorrect installation, faulty configuration, failure to comply with the heating manufacturer's instructions, or incorrect sizing and hydraulic configuration of the system.

Always follow the documentation, safety instructions, and installation requirements of the relevant heating equipment and other connected components during installation and use.

## 0¡❶¶7.Conventional.On–Off

| Central Heating | 2 | Potential-Free |
|---|---|---|

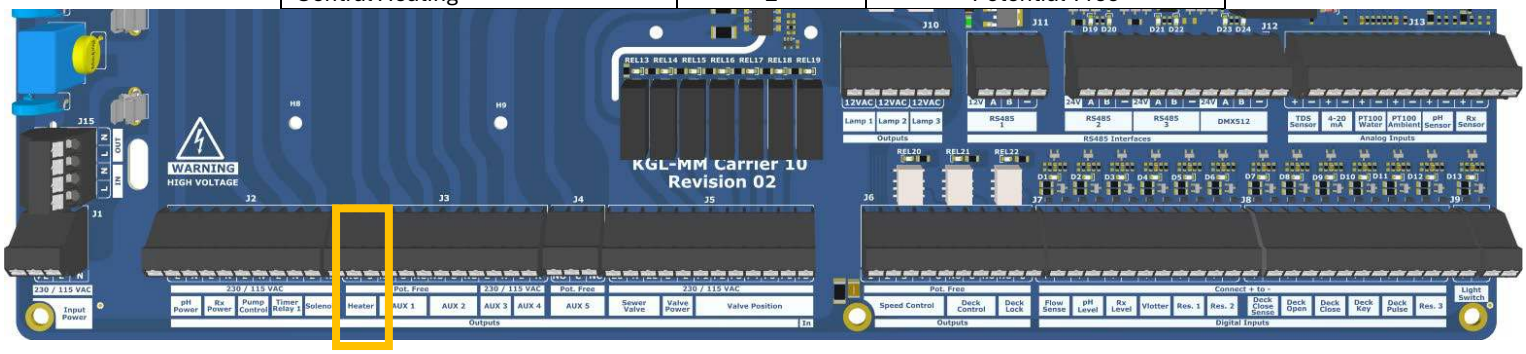


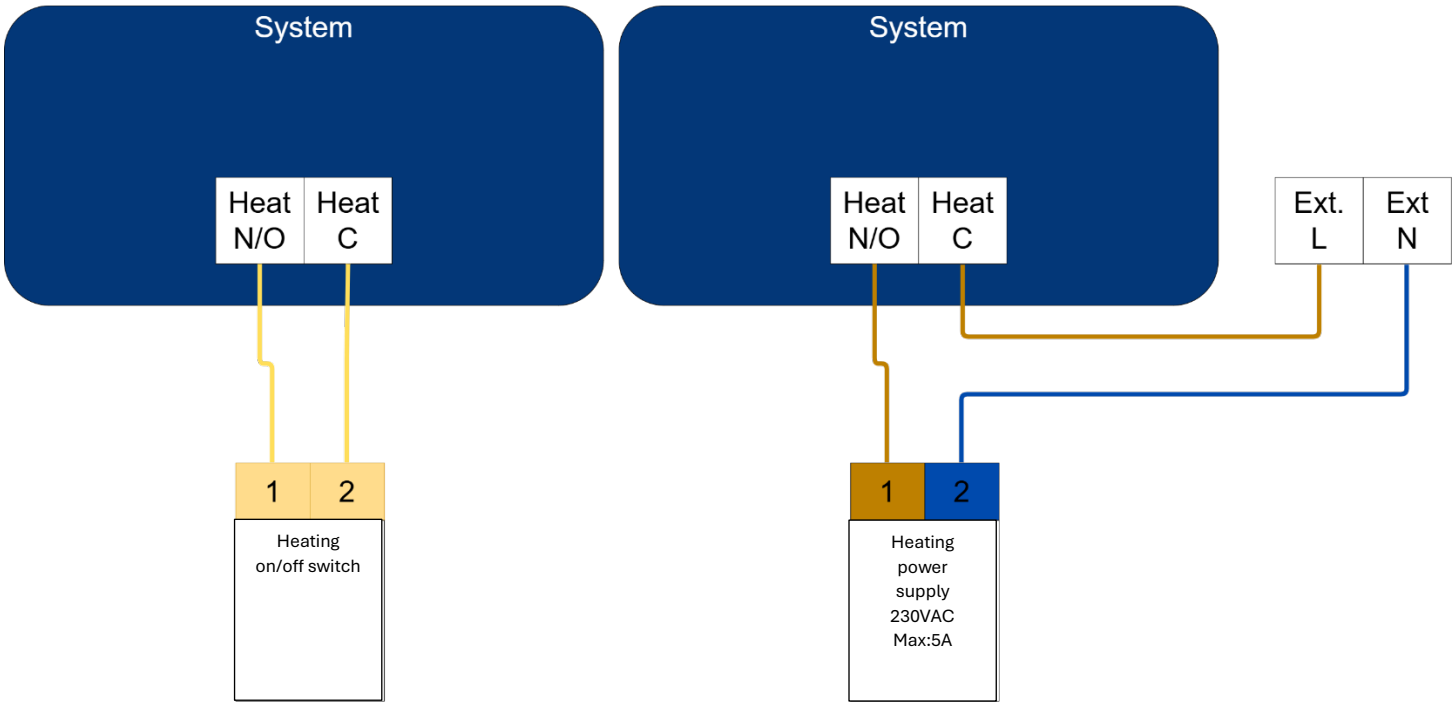

## 0¡❶8.Connecting.the.temperature.sensor

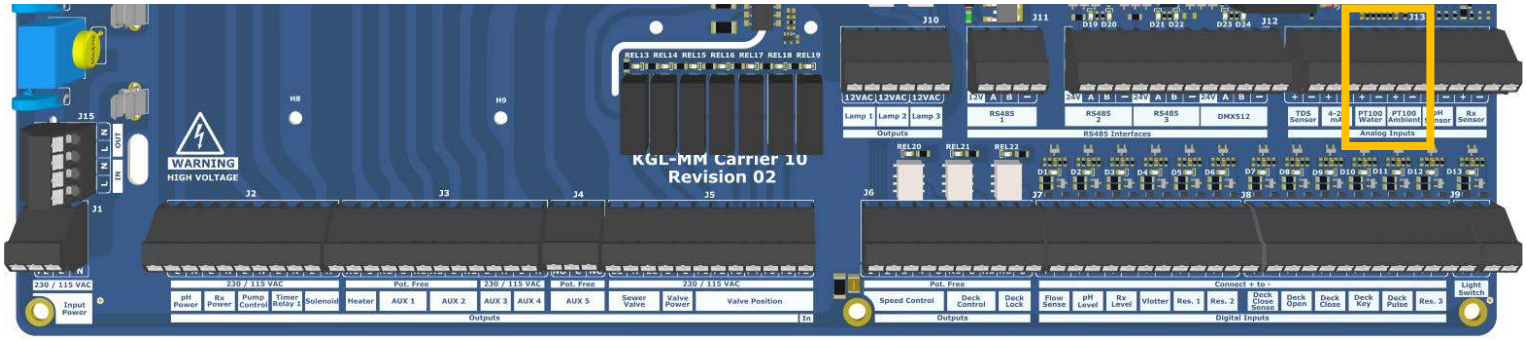


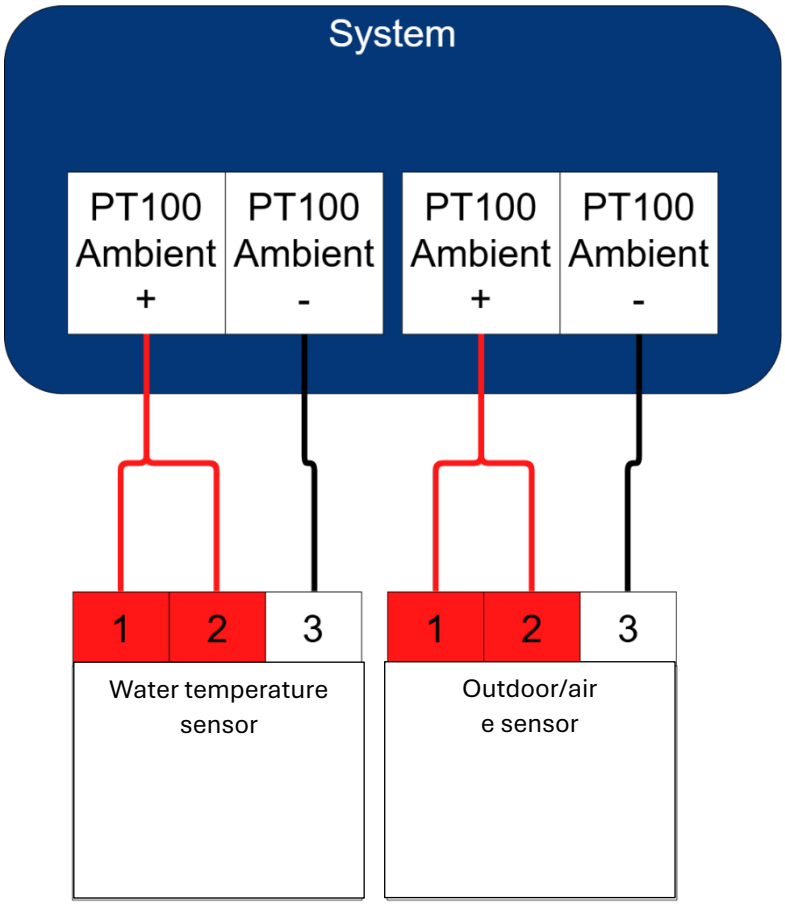


The sensors are equipped with 3 wires, the red wires of which must be connected to a single port.

- **2x Red = +**
- **White = –**

## 4.6 Water Supply

**Safety and Responsibilities (Water Replenishment)**

The Norsup ONE V3 can function as a central control and regulation unit for external water supply installations, such as solenoid valves, fill valves, automatic refill systems, break tanks, level sensors, and external safety devices. The Norsup ONE V3 is **not a primary safety device** for water supply and in no way replaces the safety measures against flooding, leakage, or backflow required by the manufacturer, installer, or legislation.

The water supply system must always be **independently** protected against, among other things, **unrestricted water supply**, **flooding**, **leakage**, **faulty level measurement**, **stuck valves**, **pressure issues** , and **backflow,**in accordance with the manufacturer's instructions and applicable standards. The correct and safe operation of the replenishment source, the piping, and the hydraulic system is entirely the responsibility of the manufacturer of the components used, the installer, and/or the user.

The Norsup ONE V3 features supporting, signal-dependent functions that can activate and limit water replenishment, such as:

- Starting water replenishment based on a water level signal (e.g., minimum level);
- Stopping water replenishment upon reaching the desired level (e.g., maximum level);
- Limiting refill time or applying maximum refill cycles (if configured);
- Blocking refilling in case of unrealistic readings or sensor failures (depending on configuration);
- Generating alerts during prolonged refilling, erroneous level signals, or abnormal behavior.

These functions are intended solely as **a secondary support layer** for control and monitoring. They should not be considered fail-safe, primary protection, or an absolute guarantee against malfunctions, damage, or hazardous situations.

Norsup accepts no liability for damage or consequential damage resulting from the absence or failure of primary safety devices, incorrect installation, faulty configuration, failure to comply with the component manufacturer's instructions, or from incorrect sizing and hydraulic design of the water replenishment system.

Always follow the documentation, safety instructions, and installation requirements of the water replenishment components and other connected system components during installation and use.

## 0¡❷¶7.Connecting.the.fill.valve–solenoid

The fill valve/solenoid output switches **230VAC**.

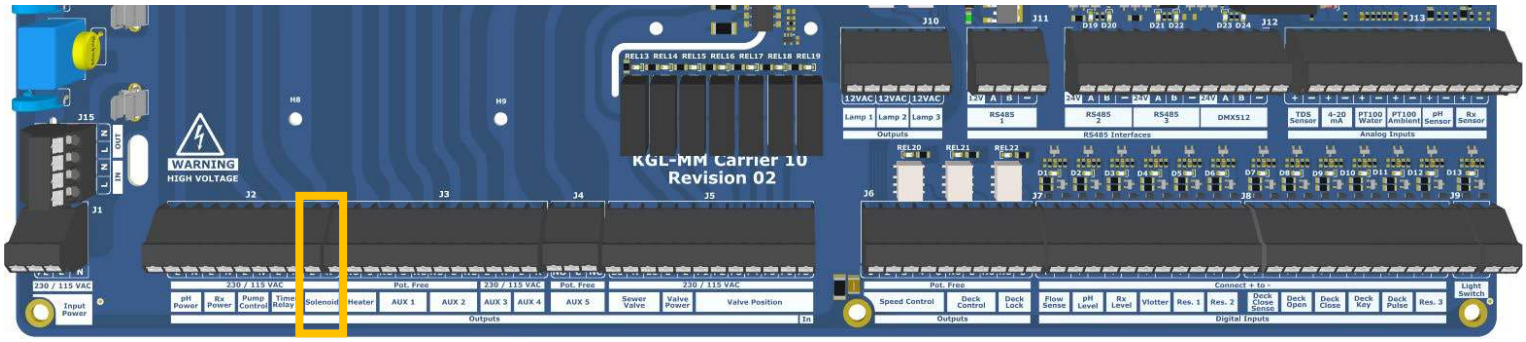


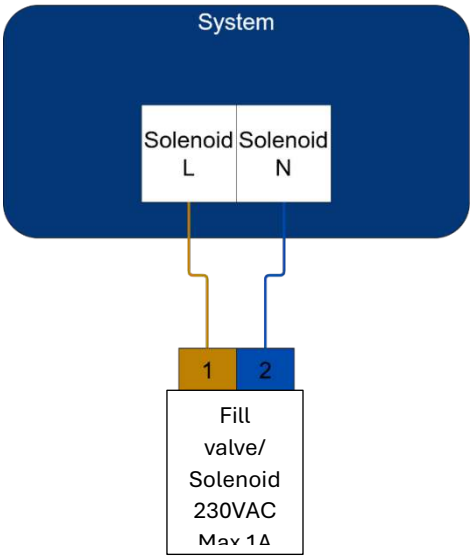


## 0¡❷¶8.Connecting.the.float

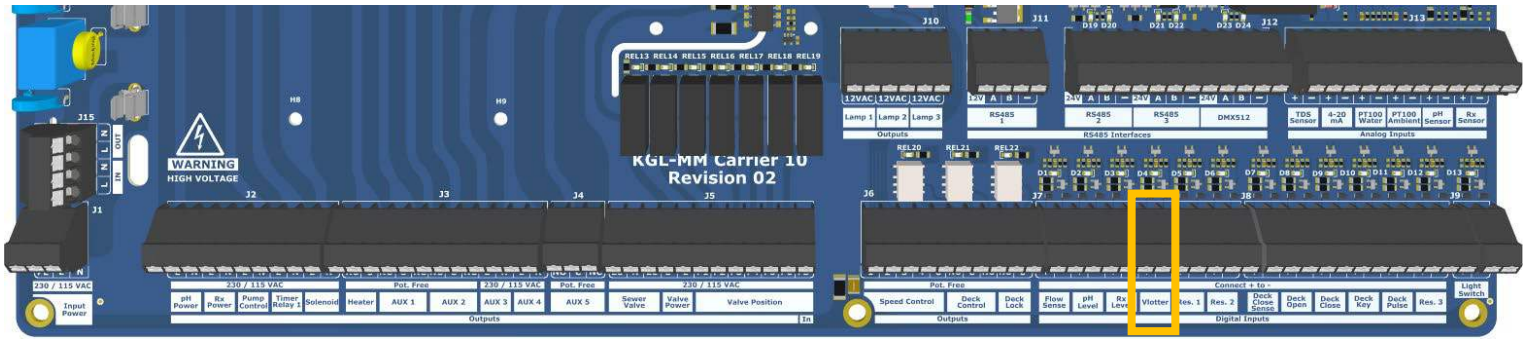


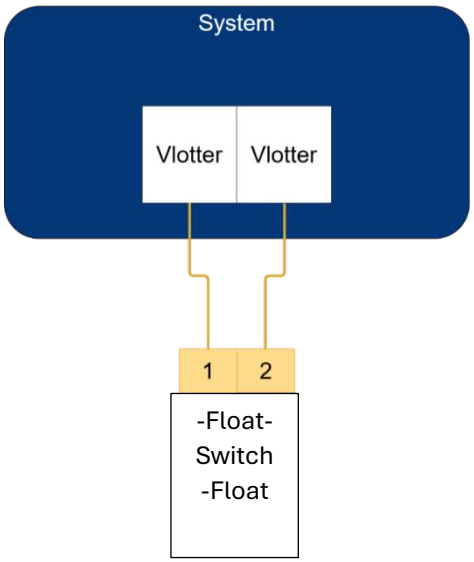


## 0¡❷¶9.Connecting.the.WLS.9

**Important:** Use the **WLS-3 (Water Level Sensor)** , **port #1**. Only port #1 is equipped with the **built-in galvanic isolation** on the circuit board, which is necessary for reliable operation and to prevent malfunctions and damage.

For installation of the WLS 3, see the included WLS 3 manual,

**Note:**

- **Connect WL-A to B**
- **Connect WL-B to A**

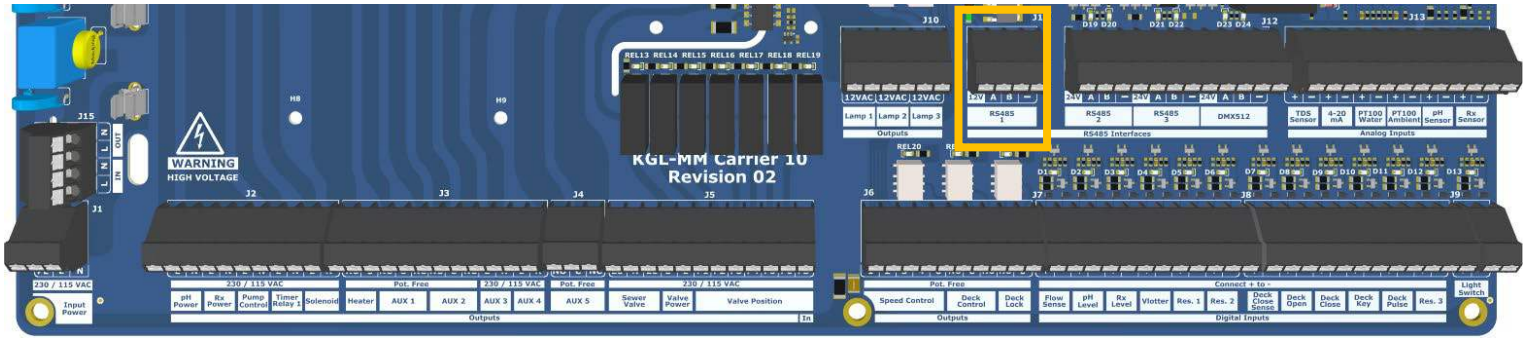


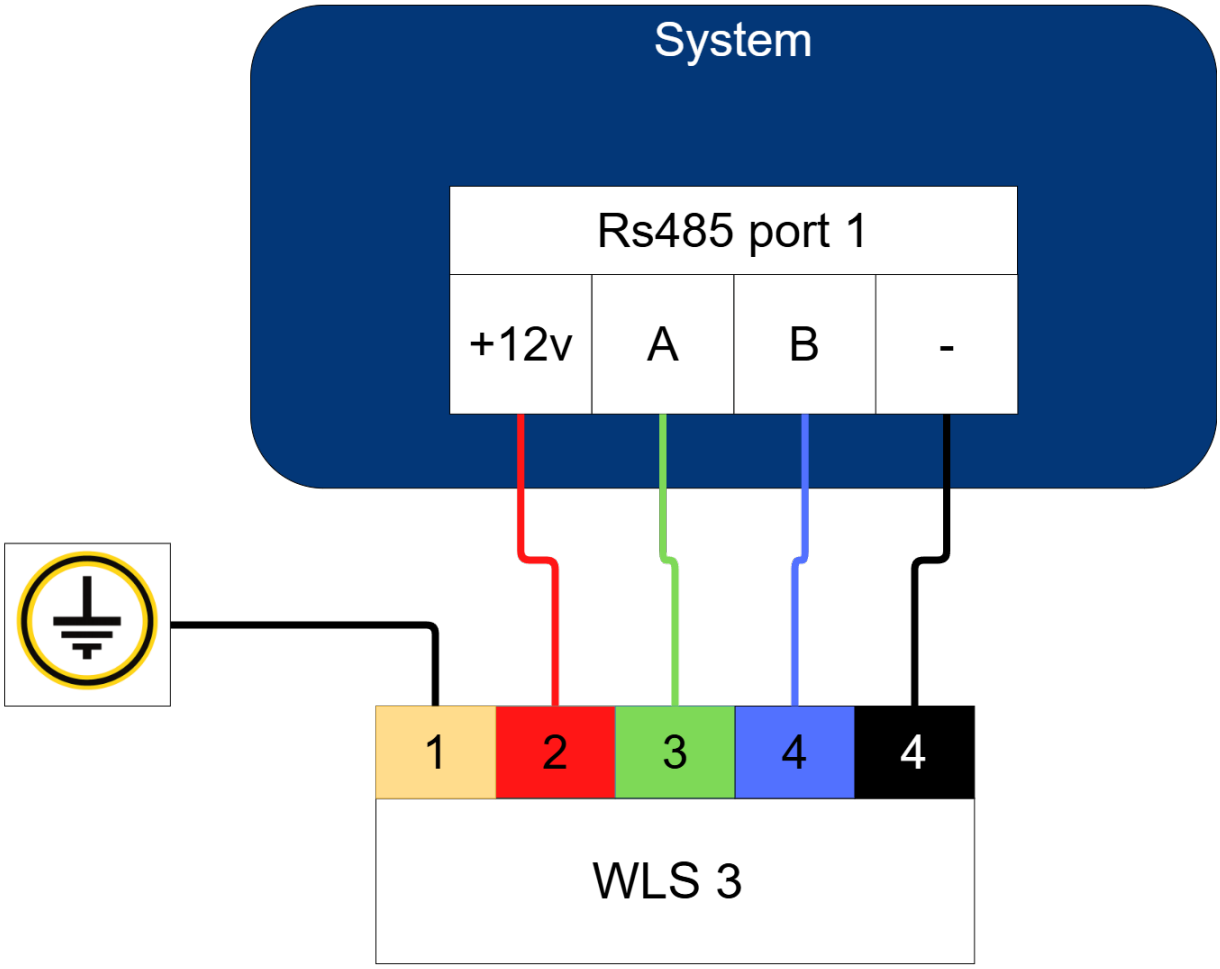

## 4.7 Rewinding

**Safety and Responsibilities (Backwashing)**

The Norsup ONE V3 can function as a central control and regulation unit for external filter installations and backwash systems, such as 6-way valves, automatic backwash valves, actuators, flush valves, bypass configurations, filter pressure measurements, and external interlocks. The Norsup ONE V3 is not a primary safety device for the backwash process and in no way replaces the safety measures required by the manufacturer or installer against pressure issues, incorrect valve positions, leaks, or hydraulic damage.

The filter system and backwash system must always be independently protected against, among other things, incorrect or simultaneous valve positions, insufficient flow, overpressure, air ingress, backflow, leakage, unintended draining of pipes, and mechanical blockages, in accordance with the filter and valve manufacturer's instructions and applicable standards. The correct and safe operation of the hydraulic assembly, valve mechanism, and backwash components is entirely the responsibility of the manufacturer of the connected components, the installer, and/or the user.

The Norsup ONE V3 features supporting, signal-dependent functions that can initiate, control, and limit the backwash process, such as:

- Initiating backflushing based on a schedule (if configured);
- Automatically cycling through backwash steps with adjustable flush times and wait times (depending on configuration and valve type);
- Blocking or aborting backwashing when the filter pump is not in operation (depending on configuration);
- Generating alerts for abnormal cycle durations, missing signals, or malfunctions in the backwash process.

These functions are intended solely as a secondary support layer for control, automation, and monitoring. They should not be considered fail-safe, primary protection, or an absolute guarantee against malfunctions, damage, or hazardous situations.

The operation of these support functions depends on correct installation, proper configuration, and reliable external signals and components, such as pump status, pressure measurements, valve position feedback, actuators, external interlocks, and the hydraulic configuration of the filter system. Defective sensors, incorrect installation, contamination, blockages, incorrect settings, a stuck valve, or incompatible components can result in the backwash process not being performed correctly, not stopping in time, or starting unintentionally.

Norsup accepts no liability for damage to filter systems, valves, piping, or consequential damage resulting from the absence or failure of primary safety devices, improper installation, incorrect configuration, failure to comply with the filter or valve manufacturer's instructions, or from incorrect sizing and hydraulic configuration of the system.

Always follow the documentation, safety instructions, and installation requirements for the filter, valve, and backwash components used, as well as other connected system components, during installation and use.

## 0¡3¶7.Autovalve

- **Please note ! Follow the autovalve manual carefully!**
  - **Install only the electric ball valve supplied with the autovalve**
  - **Install the autovalve only on 6-way valves as described in the manual**

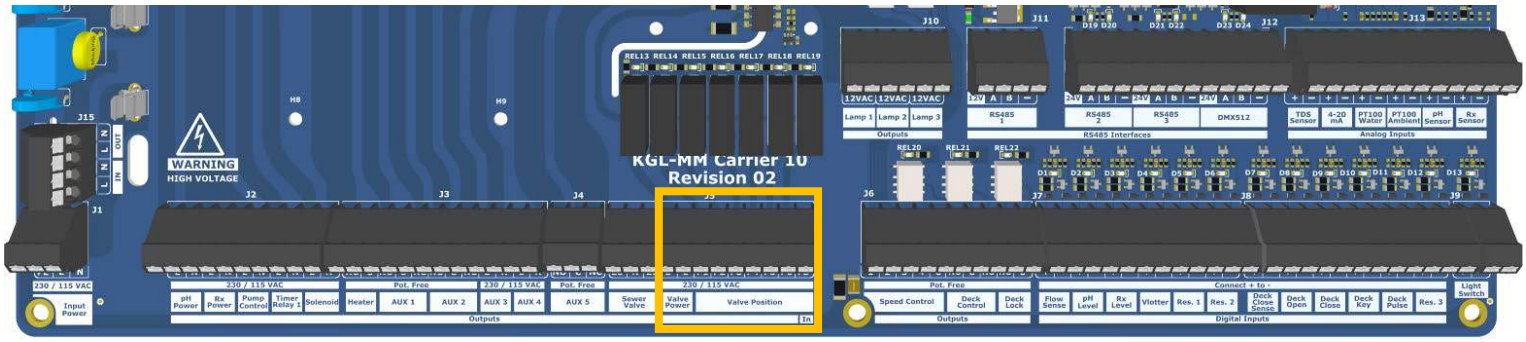


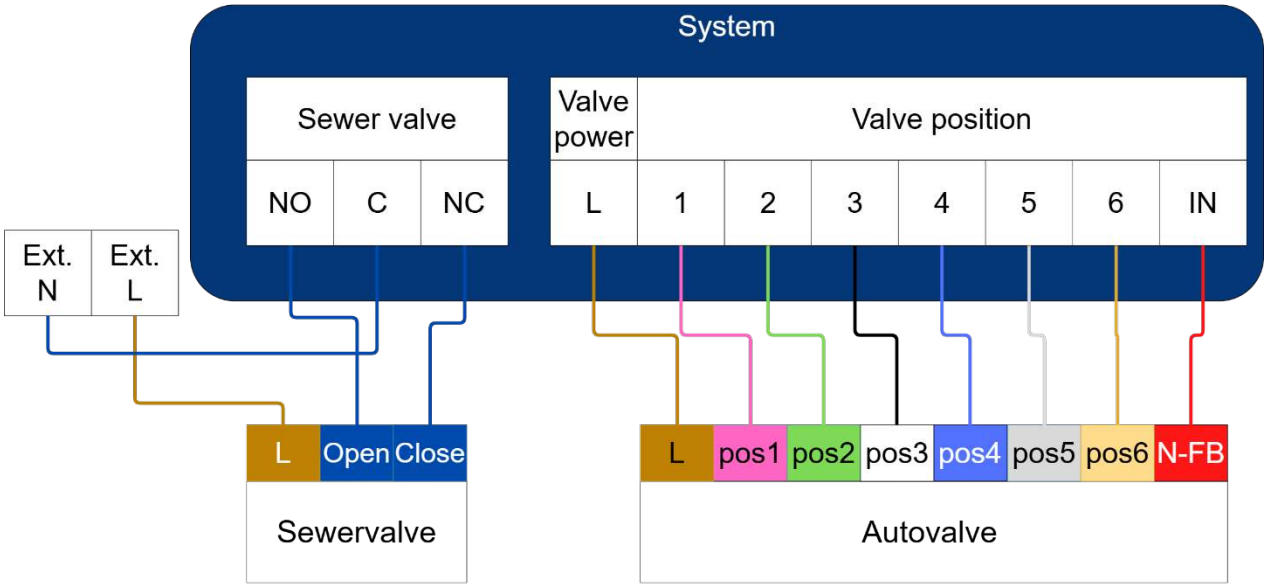


## 0¡3¶8.Pneumatic

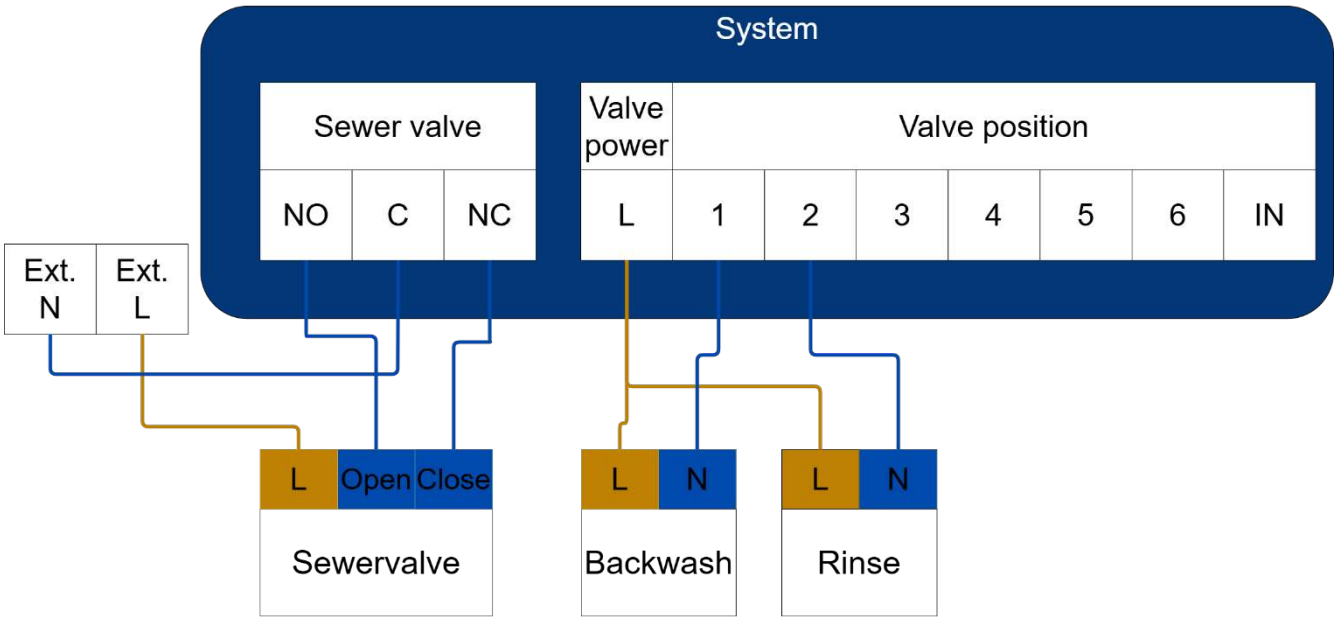

## 4.8 Cover

**Safety and Responsibilities (Cover Control)**

The Norsup ONE V3 can function as a central control and regulation unit for pool covers (roller shutter/slats/cover). The Norsup ONE V3 is not a primary safety device for cover systems and in no way replaces the safety devices, emergency stop provisions, mechanical limits, or safety functions required by the manufacturer or installer to prevent injury, entrapment, damage, or hazardous situations.

The correct and safe operation of the cover system (motor, mechanics, end positions, couplings, control, safety devices, and operation) is entirely the responsibility of the cover manufacturer, the installer, and/or the user. The cover must always be independently protected against, among other things, entrapment, unintended movement, mechanical blockages, overload, incorrect rotation direction, drive jamming, incorrect end adjustment, water damage, and electrical overload, in accordance with the manufacturer's instructions and applicable standards.

The Norsup ONE V3 supports cover control in two configurations:

**1) Control of a third-party cover control system (pulse control)**

The Norsup ONE V3 can operate an external cover control system by sending a **pulse** to the **OPEN**and **CLOSE inputs**of the third-party control system, similar to operating a key switch or pushbutton. In this configuration, the Norsup ONE V3 acts solely as a control interface. All primary safety protections and safety logic (such as motor protection, limit positions, interlocks, locks, and safe stop behavior) must be fully covered by the external cover control and/or motor protection.

**2) Direct control of a tubular motor via Covco**

When a Covco module is present, the Norsup ONE V3 can directly control a tubular motor. In this configuration, **if properly configured**, the Norsup ONE V3 can apply overcurrent protection to monitor the motor current and interrupt the drive in the event of an overload. This overcurrent protection is intended as supplementary protection and does not replace the required protections specified by the motor and enclosure manufacturer.

The operation of direct motor control, including overcurrent protection, depends on correct installation, proper motor configuration, correct wiring, appropriate sizing, and a correct mechanical setup. Situations such as entrapment, mechanical blockages, incorrectly set end positions, incorrect direction of rotation, defective motor components, external voltage problems, or incorrect installation can still lead to damage or hazardous situations.

**Safety requirement for direct motor control:** When a tubular motor is directly controlled via Covco, the primary protection against hazardous situations (such as entrapment, blockages, or unintended movement) is not guaranteed by the Norsup ONE V3. The installation must therefore be carried out and used in such a way that operation takes place exclusively under supervision. Opening and closing the cover may only be performed when there is **a continuous view** of the deck and a **stop device** (stop button/emergency stop or direct interruption of operation) is **within reach** . Operation without direct visibility of the deck (e.g., remotely or unsupervised) is not permitted.

The Norsup ONE V3 can utilize supporting, signal-dependent functions to organize and limit the operation of the cover (depending on configuration). These functions are intended solely as support for operation and automation and must not be regarded as fail-safe, primary safety measures, or an absolute guarantee against malfunctions, damage, or hazardous situations.

Norsup accepts no liability for damage to cover systems, motors, controls, or consequential damage resulting from the absence or failure of primary safety devices, improper installation, incorrect configuration, failure to comply with the cover or motor manufacturer's instructions, or from incorrect sizing and mechanical design of the system.

Always follow the documentation, safety instructions, and installation requirements for the cover components, motors, and any external controls used during installation and operation.

## 0¡❹¶7.Connecting.the.Key.Switch

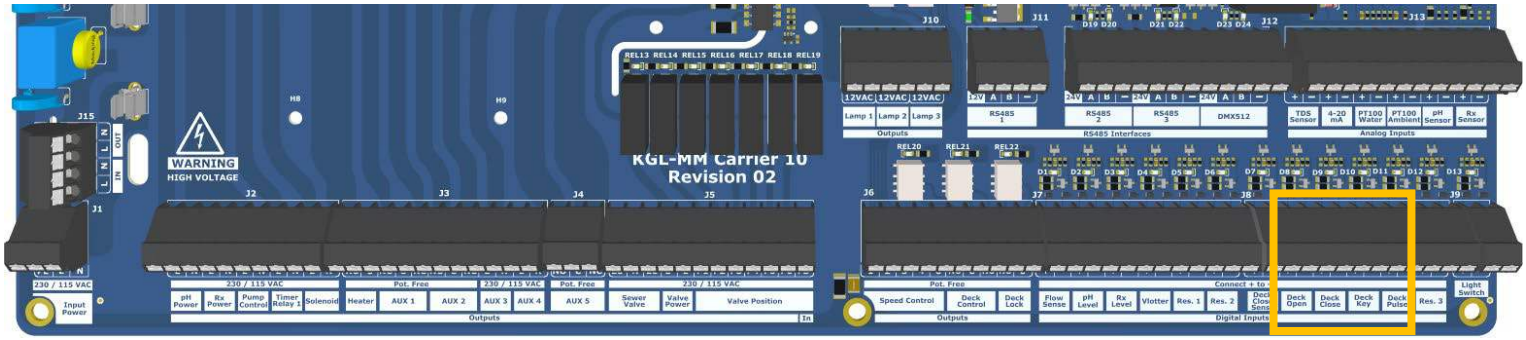


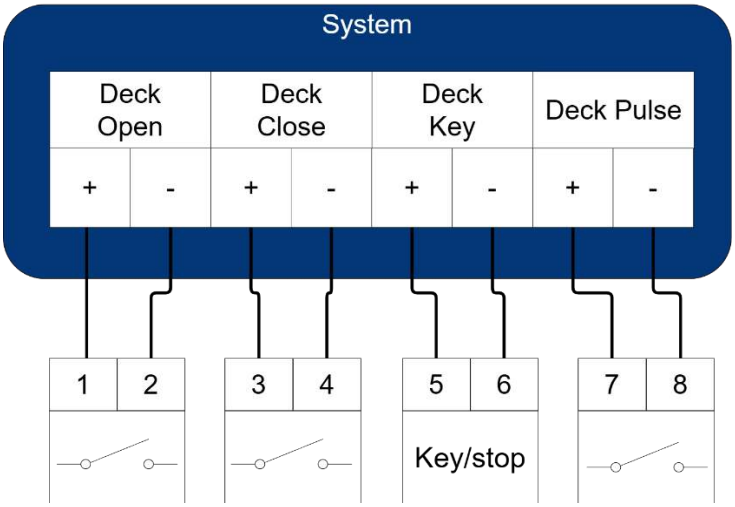


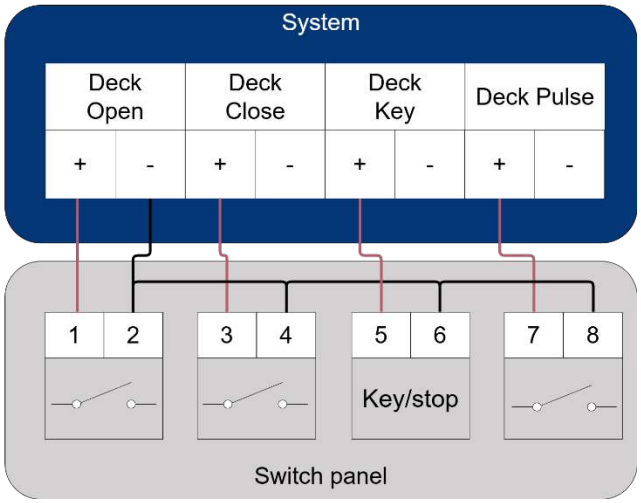


The connections are divided into four functions, each with a **+** and **–** terminal:

- **Deck Open** → terminal **1 (+)** and **2 (–)**
  Connect a contact here that opens the cover **opens**.
- **Deck Close** → terminal **3 (+)** and **4 (–)**
  Connect a contact here that closes the cover **closes**.
- **Deck Key/Key-stop** → terminal **5 (+)** and **6 (–)**
  This is a **safety contact** (key/stop). Without this contact active, the cover cannot be operated (depending on settings).
- **Deck Pulse** → terminal **7 (+)** and **8 (–)**
  This input is used when a cover is controlled via **pulse control** (such as a third-party control system with open/close pulse).

**Important considerations**

- Use only a **potential-free contact** (dry contact).
- Operate the cover only when there is **a direct view** of the deck and a **stop mechanism** is within reach.
- After installation, always check that **Open** and **Close** respond correctly and that the **Key/stop** actually blocks operation when it is turned off.
- Always check local laws and regulations regarding the use of a key switch.

## 0¡❹¶8.Connecting.the.external.control.box.for.the.cover

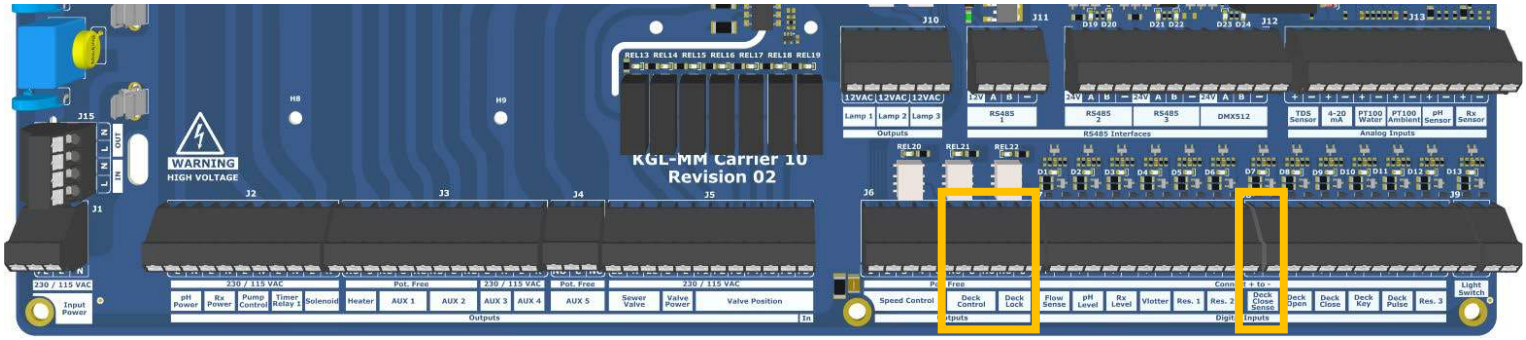


### Roldeck¿

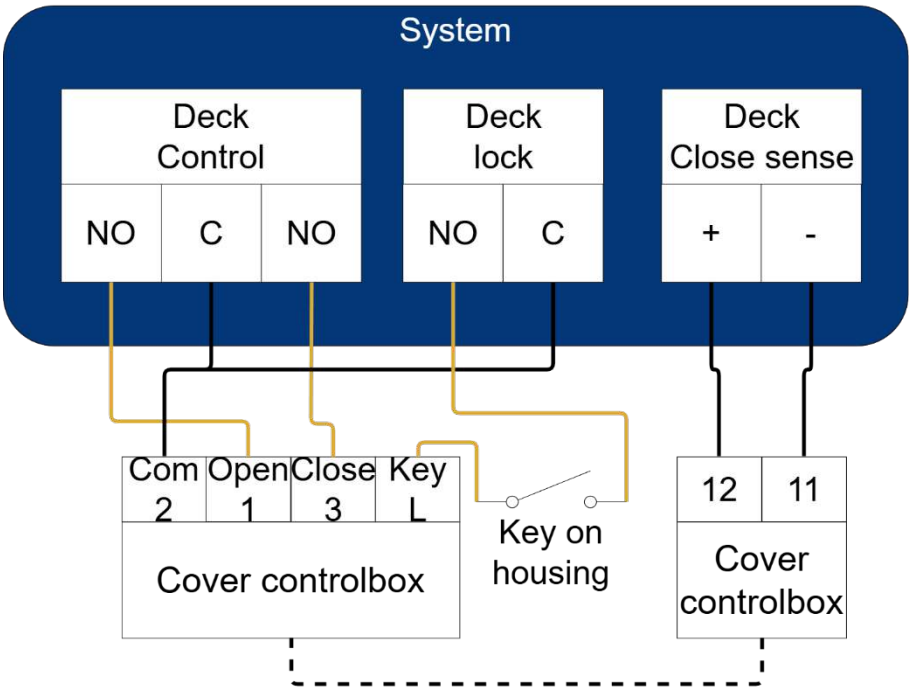


- Ensure that the relay (12/11) is closed when the cover is closed.

### Aquadeck.ECB

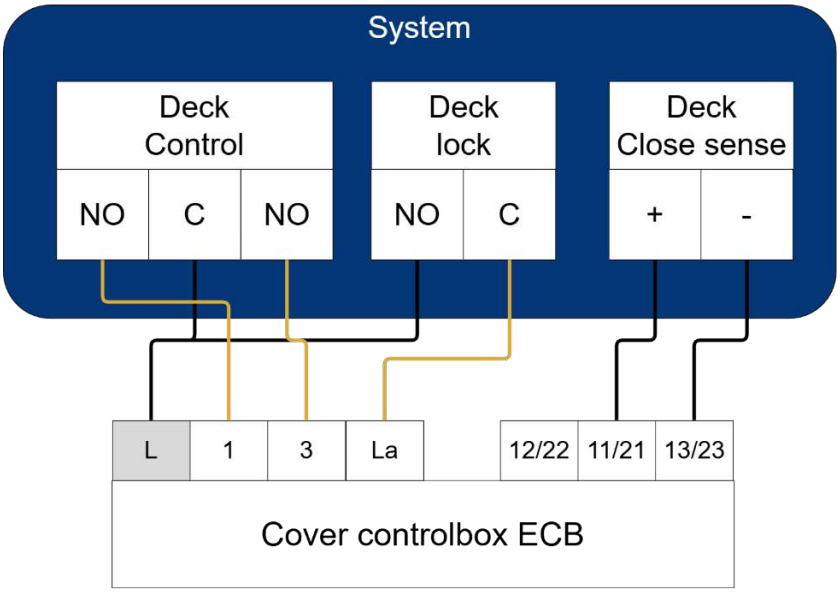


- Ensure that the relay (11/21 13/23) is closed when the cover is closed.

## Aquadeck.ECD

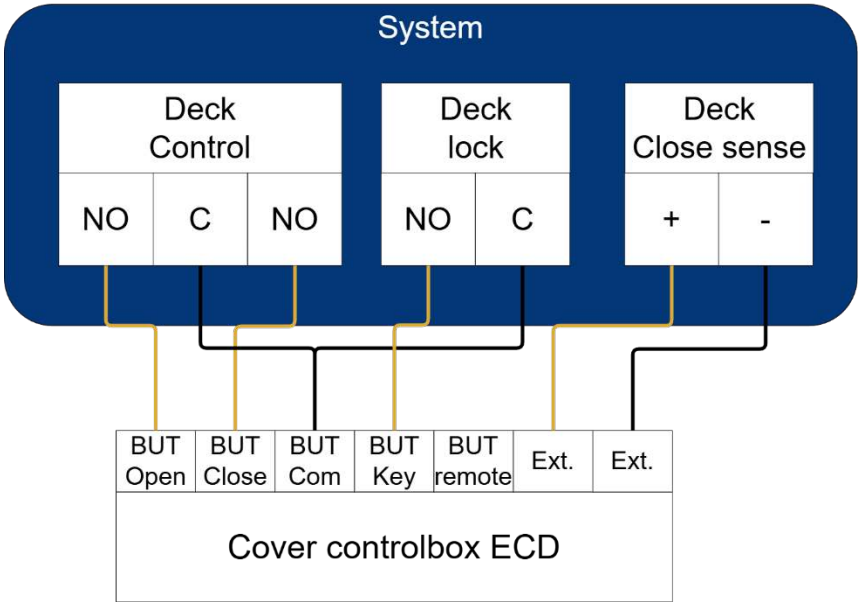


- Ensure that the relay is closed when the cover is closed.

## Aquatop.(T™ A)

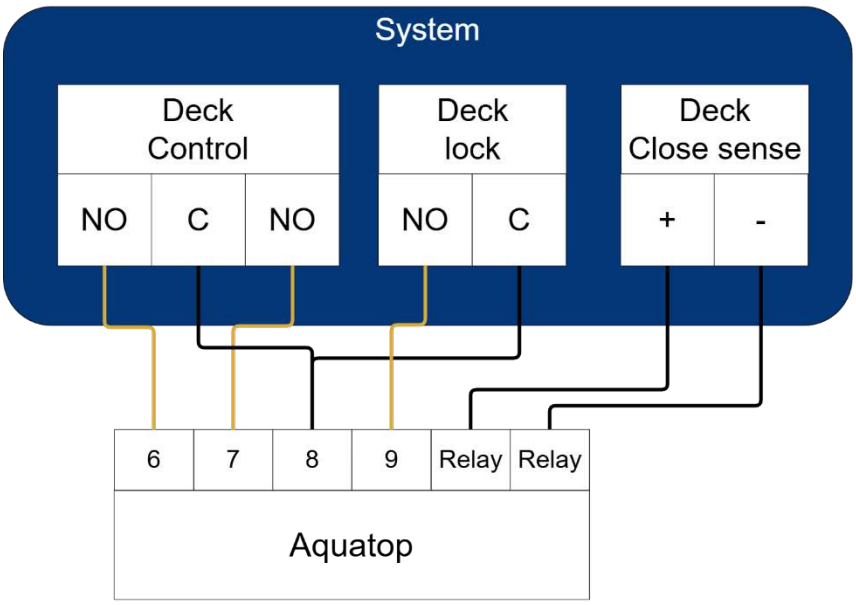


- Ensure that the relay is closed when the cover is closed.

### Mecatec

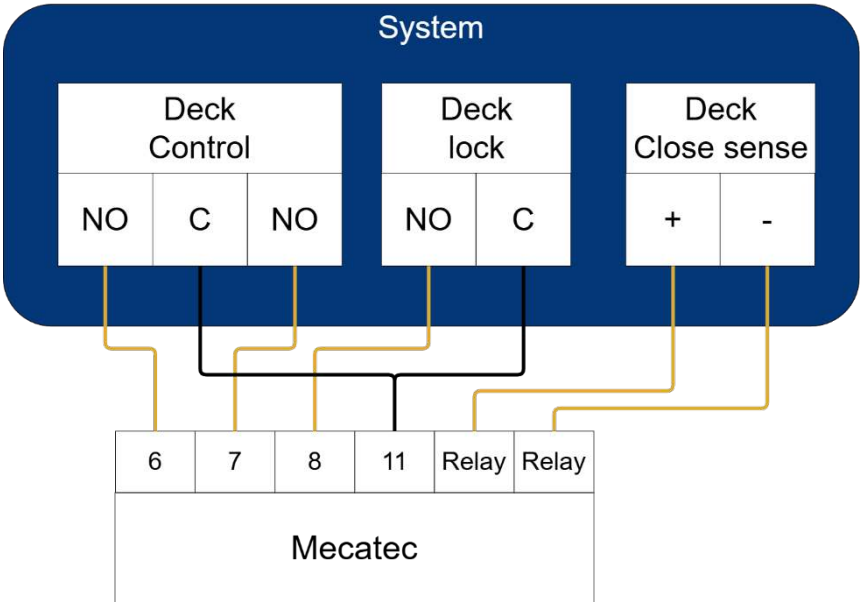


- Ensure that the relay is closed when the cover is closed.

## 0¡❹¶9.Tubular.Motor.Control

The Norsup ONE V3, in combination with the **Covco module**, can **directly control**a pool cover with a tubular motor. The Covco module is installed in the Norsup ONE V3 and handles motor control, including monitoring and safety functions (depending on configuration).

The **supply voltage for the encoder** is adjustable and can be set to **5 VDC**, **12 VDC** , or **24 VDC** (depending on the encoder type). The power supply for the tubular motor itself is **always 24 VDC** and is rated for up to **10 A**.

**Important:** Always check with the motor supplier to determine the required supply voltage and maximum current, and confirm that the motor is suitable for control at **24 VDC/max. 10 A** before connecting it.

**NOTE – Tubular motor cable length:** The **standard cable length for a tubular motor is 30 meters**. Extending this cable is permitted **only in consultation with the motor supplier** and only with the guarantee that the **voltage across the encoder does not fall below the nominal value**. If the encoder voltage is too low, the Norsup ONE V3 cannot reliably read the pulses, resulting in encoder errors, incorrect position determination, and/or the overcurrent protection tripping. After extending the cable, always check the voltage at the encoder connection while the motor is moving.

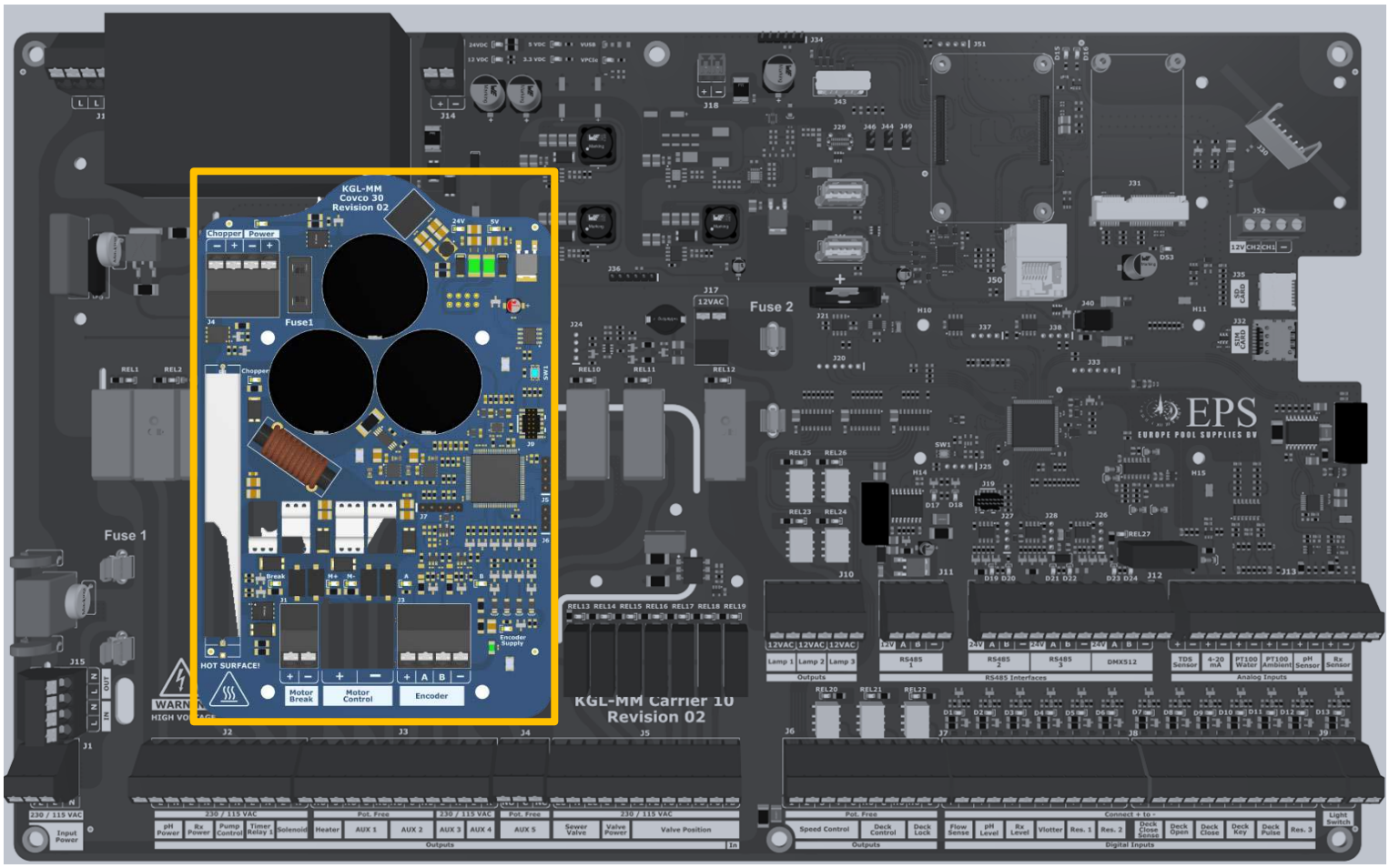


## PCS

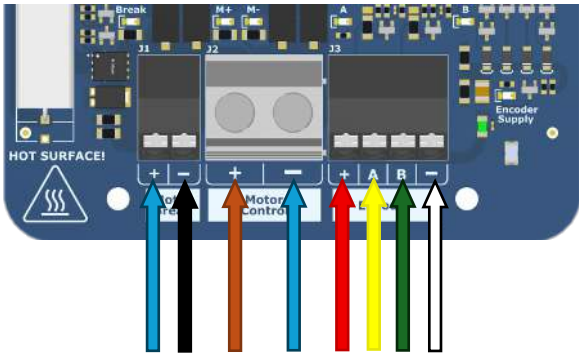


## Roldeck

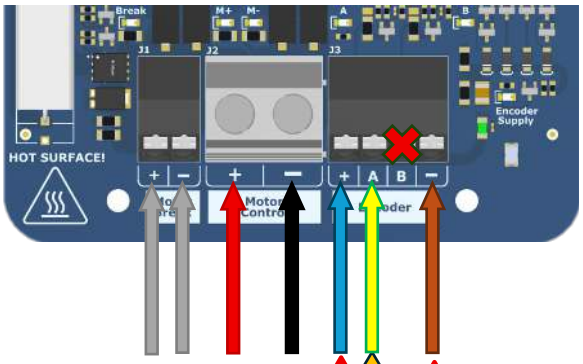


Please note:

- Encoder + = BLUE
- Encoder - = BROWN

Please note ! Due to a different operating principle compared to other motors, the **green AND yellow** wires must be connected to the A encoder input on the Roldeck!

## Aquadeck-T™ A

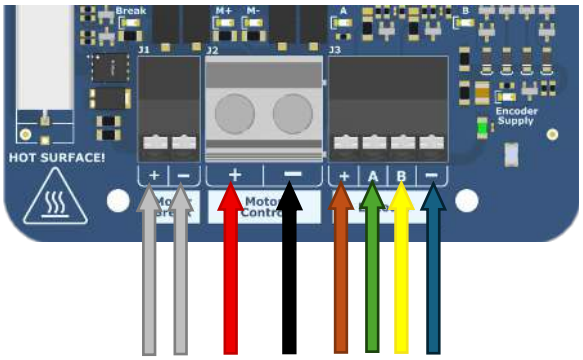


## Mecatec

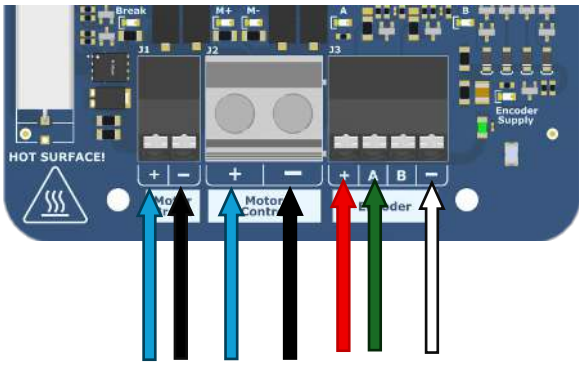


## Covrex-Sirem-Soldeck

- Note: The encoder's supply voltage must be configured to **24 Vdc**

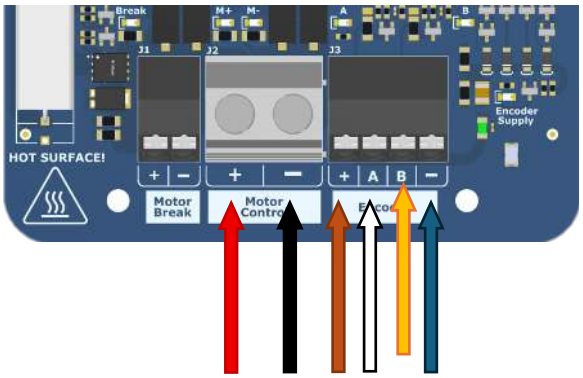

## 4.9 Lighting

The Norsup ONE V3 supports the control of pool lighting at **12 VAC**. For this purpose, a **150 W 12 VAC transformer** is integrated into the Norsup ONE V3. This allows you to control both standard lighting and **RGB lighting** , depending on the type of light and the selected configuration.

For RGB lighting, the color change can be achieved by **briefly turning**the light off and then back on. To do this, the Norsup ONE V3 can send a **pulse to the power supply** , causing the lamp to switch to the next color setting (in accordance with the operation of the connected RGB lamp).

In addition, the Norsup ONE V3 also supports lighting that is **directly programmable** via the system. For example, **Ingia RGB** and **Astral Lumiplus Mini V2** can be controlled directly via the Norsup ONE V3, depending on the configuration and compatibility.

**Safety and Responsibilities (Lighting)**

The Norsup ONE V3 functions as a control unit for external pool lighting, but is **not a primary safety device** for the lighting system and in no way replaces the safety measures required by the manufacturer or installer. The lighting system must always be independently protected against, among other things, **short circuits**, **overloads**, **overheating**, **water ingress**, **insulation faults**, **incorrect voltage** , and **improperly fused cabling**, in accordance with the lamp and transformer manufacturer's instructions and applicable standards.

The correct selection and use of cabling, connectors, fuses, and waterproof feed-throughs are entirely the responsibility of the installer and/or user. Incorrect sizing or installation can result in damage to lamps, cabling, transformers, and controls, or lead to hazardous situations.

The Norsup ONE V3 can perform auxiliary functions for switching and automating lighting, such as schedules and pulse control for RGB color changes. These functions are intended solely as **convenience features and** should not be considered fail-safe or a guarantee against damage or malfunctions. Incorrect settings, incompatible RGB lamps, or abnormal switching behavior can lead to undesirable operation or a shortened lifespan.

Norsup accepts no liability for damage to lighting or consequential damage resulting from improper installation, incorrect configuration, failure to comply with the manufacturer's instructions, or the absence of required safety measures and proper electrical protection.

Always follow the documentation, safety instructions, and installation requirements for the lighting components used during installation and operation.

**Tip:** For RGB lighting, please consult the manufacturer regarding cable lengths and insulation of other power cables to prevent synchronization errors.

### 0¡❺7.78.VAC.Lighting.Power.Supply

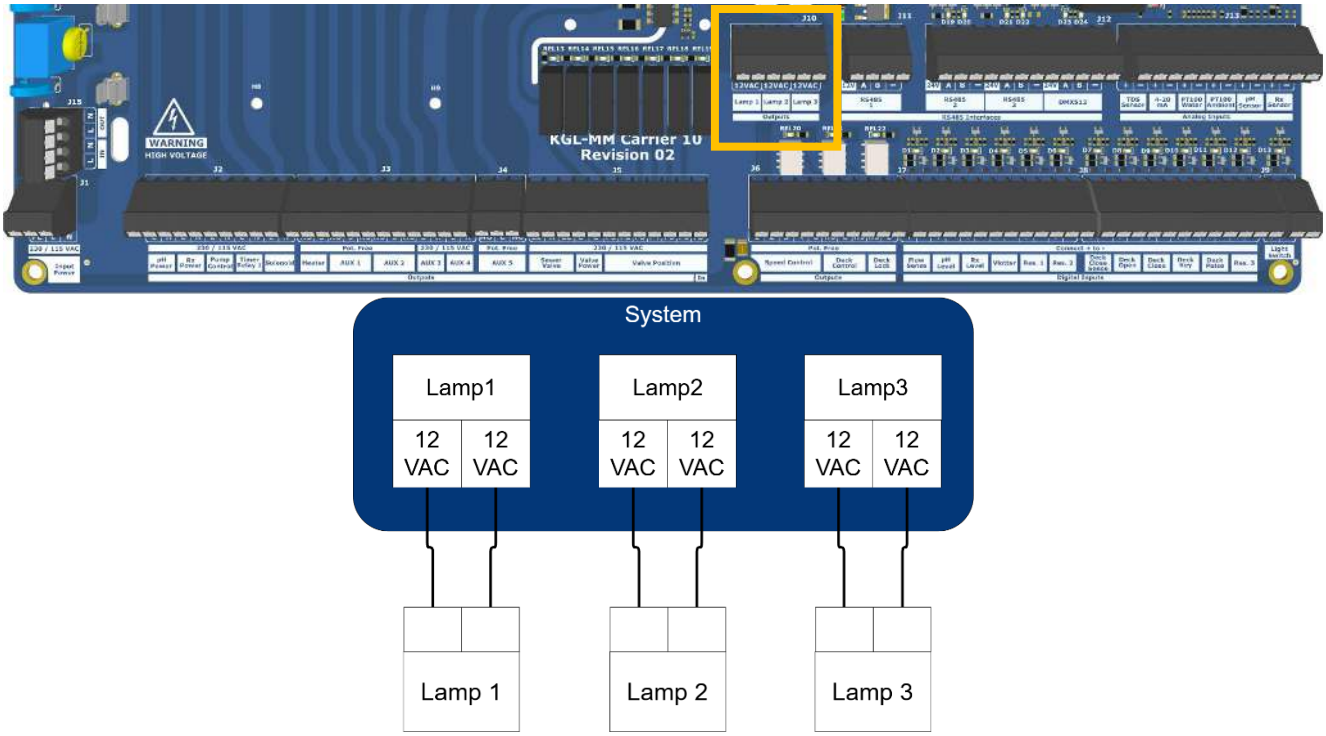


## 4.10 Auxiliary Relay

**Safety and Responsibilities (Auxiliary Relays)**

**Note: Timer relay 1 is used as Auxiliary Relay 6 (AUX 6)**

The auxiliary relays of the Norsup ONE V3 are intended as **switching outputs** and **do not** constitute primary protection for the connected equipment. The Norsup ONE V3 in no way replaces the protections required by the manufacturer or installer, such as motor protection, thermal protection, overcurrent protection, pressure or flow protection, and emergency stop devices.

Because the auxiliary relays are freely configurable, there is a risk that they **may be set or used incorrectly**. Improper use or incorrect configuration can lead to unwanted switching, damage to equipment, malfunctions in the installation, or hazardous situations. It is therefore essential that the configuration of auxiliary relays be performed exclusively by an installer or user who is familiar with the operation of the installation, the load requirements of the connected equipment, and the applicable regulations.

The correct sizing of cabling, fuses, contactors (if required), and the decision to directly switch a load via the auxiliary relay or not is entirely the responsibility of the installer and/or user. Loads that exceed the switching specifications of the auxiliary relay must always be controlled via a suitable intermediate relay or contactor.

Norsup accepts no liability for damage to connected equipment or consequential damage resulting from improper installation, incorrect configuration, overloading of relay outputs, the absence of required safety devices, or failure to comply with the manufacturer's instructions for the connected equipment.

During installation and use, always follow the documentation, safety instructions, and installation requirements of the connected components, and ensure that the auxiliary relays are used exclusively within the permitted technical limits.

| **Output** | **Number of Contacts** | **Current @230 VAC [A]** |
|---|---|---|
| Aux 1 | 2 | Potential-Free |
| Aux 2 | 2 | Potential-Free |
| Aux 3 | 2 | 1,5 |
| Aux 4 | 2 | 1,5 |
| Aux 5 | 2 | Potential-Free |
| Aux 6 (TIMER RELAY 1) | 2 | 1,5 |

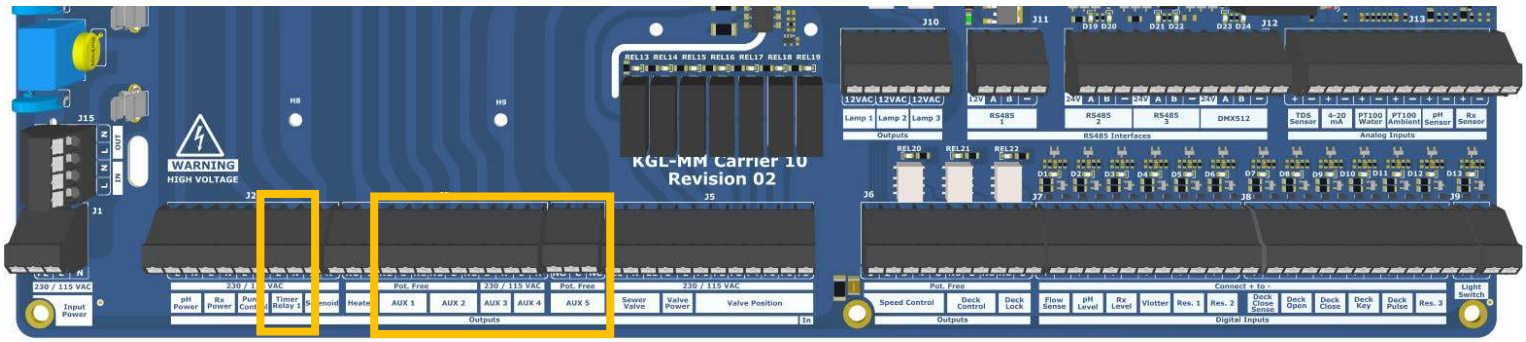

## 0¡76¡7.Connecting.Auxiliary.Relays

Depending on the application, auxiliary relays can be connected in various ways. The examples below show the most commonly used configurations.

**1) Changeover contact (COM/NO/NC)**

A changeover contact has three connection points:

- **COM (Common)** = common connection
- **NO (Normally Open/make contact)** = contact closes when the relay energizes
- **NC (Normally Closed/break contact)** = contact opens when the relay energizes

**Application:** switching between two signals or selecting between “on” and “off” with inverted logic.

**Wiring example:**

- Connect the supply (e.g., L or a control voltage) to **COM**
- Connect the load or input to **NO** if you want it to become active only when the relay is “on”
- Connect the load or input to **NC** if you want it to be active when the relay is “off”

**Practical:**

- **COM → NO** = make contact (default “off”, switches “on”)
- **COM → NC** = break contact (default “on”, switches “off”)

**2) Single contact (make contact or break contact)**

If you only need one switching function, use a single contact:

**Normally Open (NO)**

Use **COM + NO** when a device should only be switched on once the auxiliary relay becomes active.

**Example:** switching on an extra pump, lamp, signal input, or contactor coil.

**Normally closed (NC)**

Use **COM + NC** when a device or signal must be interrupted when the auxiliary relay becomes active.

**Example:** blocking an external control when a certain status is active.

**Note:** Always check the desired logic (normally open or normally closed) before commissioning.

**3) Switching an external 230 VAC power supply (switching L or N)**

In some applications, a device is powered by an **external 230 VAC power supply**, in which case the Norsup ONE V3 only handles the switching via an auxiliary relay.

**Switching the phase (L) – recommended**

This is the most commonly used and safest method.

**Wiring example:**

- External **L** → to **COM** of the auxiliary relay
- **NO** of the auxiliary relay → to **L** of the load
- External **N** → directly to **N** of the load
- Ground (PE) → in accordance with installation regulations

This interrupts the phase when the relay is off.

**Switching the neutral (N) – only if permitted**

Switching the neutral is not recommended in many installations, as the device may still carry voltage internally on the phase.

**Wiring example:**

- External **N** → to **COM** of the auxiliary relay
- **NO** of the auxiliary relay → to **N** of the load
- External **L** → directly to **L** of the load
- Ground (PE) → in accordance with installation regulations

**Important:** Always verify that this method is permitted according to local regulations and the specifications of the connected equipment.

**Important considerations**

- Preferably switch inductive loads (motors, coils, solenoid valves) via a **contactor or intermediate relay**, and not directly via the auxiliary relay.
- Ensure proper fusing and cable sizing according to the load.
- Always check operation after connection: relay on/off, correct logic, and proper switching of the load.
- If in doubt about the load or application: always use an external contactor and switch only the coil via the auxiliary relay.

## 4.11 Other Inputs

The Norsup ONE V3 has various **other inputs** that can be used to externally control or switch functions. These inputs are intended for connecting **potential-free contacts** (dry contacts), such as a switch, pushbutton, relay contact, or external control.

**Lighting on/off (external input)**

This input allows the pool lighting to be easily switched **on/off externally** . This can be done, for example, via a wall switch, push button, or external relay contact.

When the contact is activated, the Norsup ONE V3 turns the lighting on or off according to the set configuration.

**Reserve/free inputs**

In addition to the standard functions, **spare inputs** are also available. These can be freely used for additional automation or customization within the installation.

The spare inputs can be linked to various functions within the Norsup ONE V3, such as switching an auxiliary relay. This allows, for example, an external device to be turned **on or off** based on an external switch or signal.

**Example applications:**

- External on/off switch for an auxiliary relay (Aux 1 through Aux 5);
- Manual activation of a function via pushbutton;
- External switching signal from another system.

**Note:** The functionality of the auxiliary inputs depends on the selected configuration. Ensure that the inputs are used exclusively by persons familiar with the operation of the system and the connected equipment.

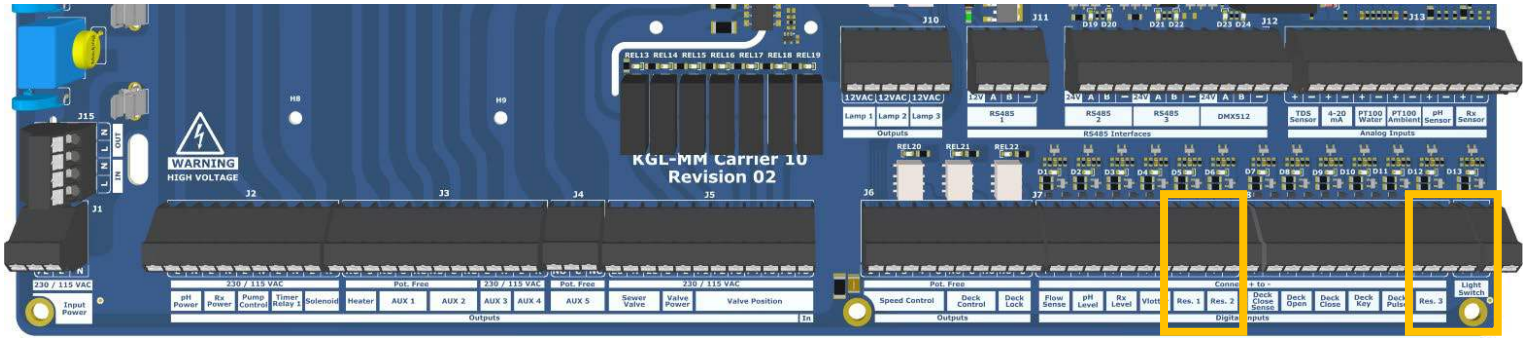


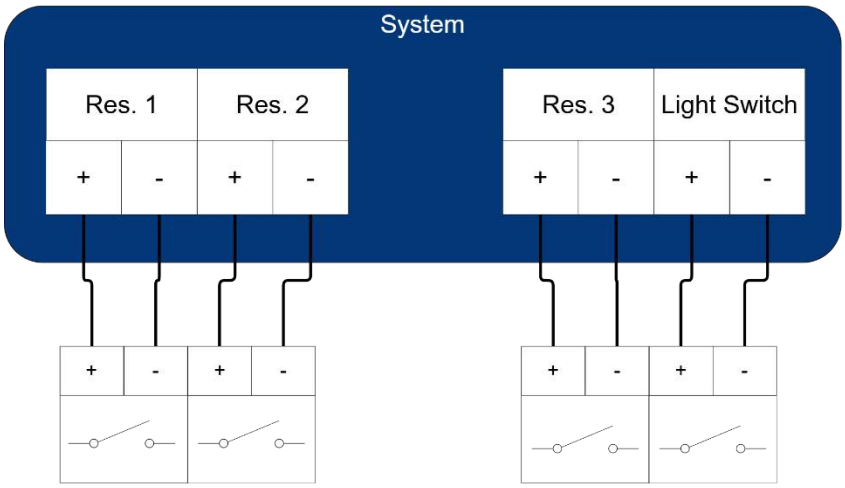

## 4.12 Overflow Pool

A pool overflow can be implemented in several ways, depending on the hydraulic setup, desired waterline, pool type, available components, and local installation requirements.
The Ecovalve control in the Norsup ONE V3 is intended as **a practical guideline** for a commonly used method of overflow control, but is not the only correct solution.

The approach described in this chapter is therefore a **guideline** for configuration and commissioning. The installer remains responsible for the technical assessment of the actual situation on site and for selecting a suitable, safe, and code-compliant design.

### 0¡78¡7.Safety.and.Responsibility.(Disclaimer)

The Norsup ONE V3 functions as a control unit for the Ecovalve control system, but is not a primary safety device for the hydraulic system and in no way replaces the safety devices required by the manufacturer, standards, or installer. You are responsible for providing backflow prevention and/or emergency provisions.

Full responsibility for correct application lies with the installer and/or user, including in any case:

- proper sizing of pipes, valves, and drainage;
- correct selection and installation of components;
- correct electrical connection and protection;
- compliance with applicable standards, regulations, and local codes;
- functional testing and safe commissioning.

Settings, example configurations, and diagrams in this manual are for reference only and should not be considered fail-safe or a guarantee against damage, malfunctions, or consequential damage. Improper installation, incorrect configuration, incompatible components, or failure to comply with regulations may result in unintended operation, damage to installation components, or unsafe situations.

Norsup accepts no liability for damage or consequential damage resulting from improper installation, incorrect configuration, improper use, or the absence of mandatory safety measures and proper technical protection.

Always follow the documentation, safety instructions, and installation requirements of the component manufacturers used during installation and operation.

### 0¡78¡8.Hydraulic.Recommendations

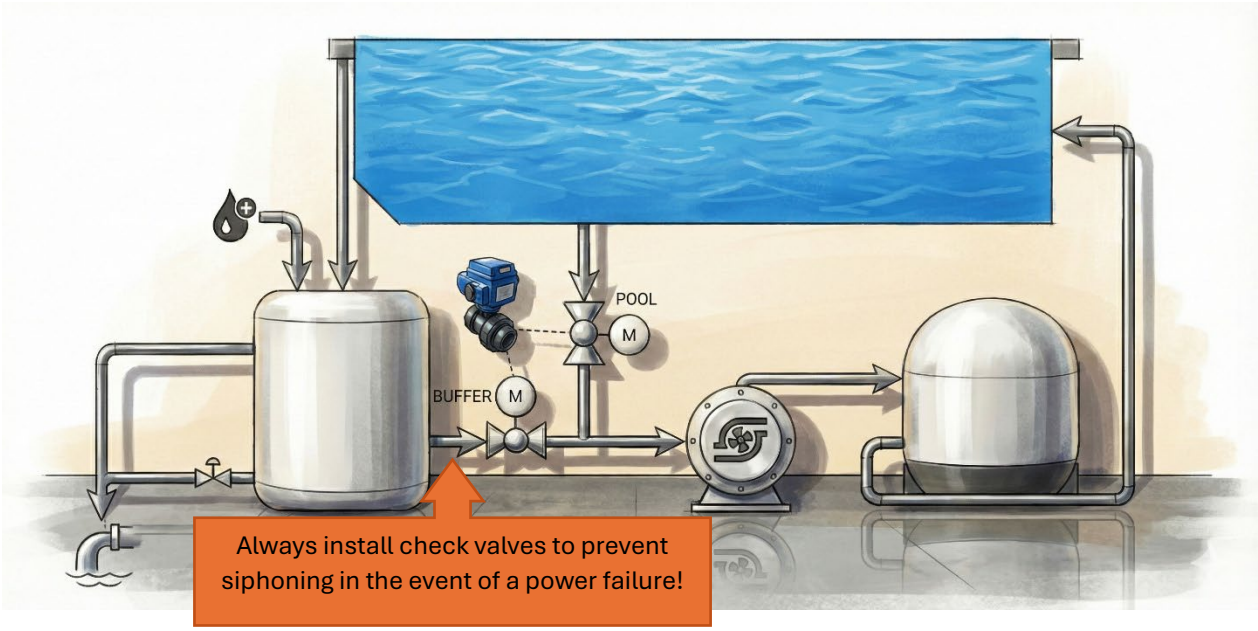


**Note:** Always ensure a backflow prevention device is in place so that the pool cannot drain in the event of a power outage or other emergencies!

## 0¡78¡9.Electrical.Installation.Advice

**See the next page for connecting an overflow system with 2 electric valves. This requires an external relay.**

**This advice assumes that a WLS-3 is used for water replenishment of the buffer tank and is properly configured.**

**Note – additional AUX relay required for flusher function**
When a contact is configured as **"flusher"** (for periodically flushing the buffer tank), a **second AUX relay** is required, which must be configured separately with a **timer function**.

**Setting recommendation:**

- Set the flusher relay to a time-controlled function (timer).
- Ensure that this relay **does not** adopt the**"closed cover"** off condition.
- In other words: the lockout on a closed deck must remain disabled for this flusher relay.

This allows the buffer tank to be flushed even when the deck is closed for an extended period.

Furthermore, the configuration described below uses two two-way valves. These must be connected in opposite directions.

Always check the operation after installation.

## Settings.for.aux.9.and.aux.0

An overflow pool can be implemented in several ways, depending on the hydraulic setup, desired waterline, pool type, available components, and local installation requirements.
The **Ecovalve control** in the Norsup ONE V3 is intended as a practical guide for a commonly used method of overflow control, but is not the only correct solution.

The procedure in this chapter is therefore a **guideline** for configuration and commissioning.
The installer remains responsible for the technical assessment of the on-site situation and for selecting a suitable, safe, and code-compliant design. Go to **4.11 Overloopzwembad**, for the electrical **installation.**

To clarify that aux 3 is for the overflow and aux 4 performs the flusher function, it is recommended to enter the following names:

- Aux3: Overflow 1
- Aux 4: Flusher (flushing the buffer tank, even when the deck is closed)

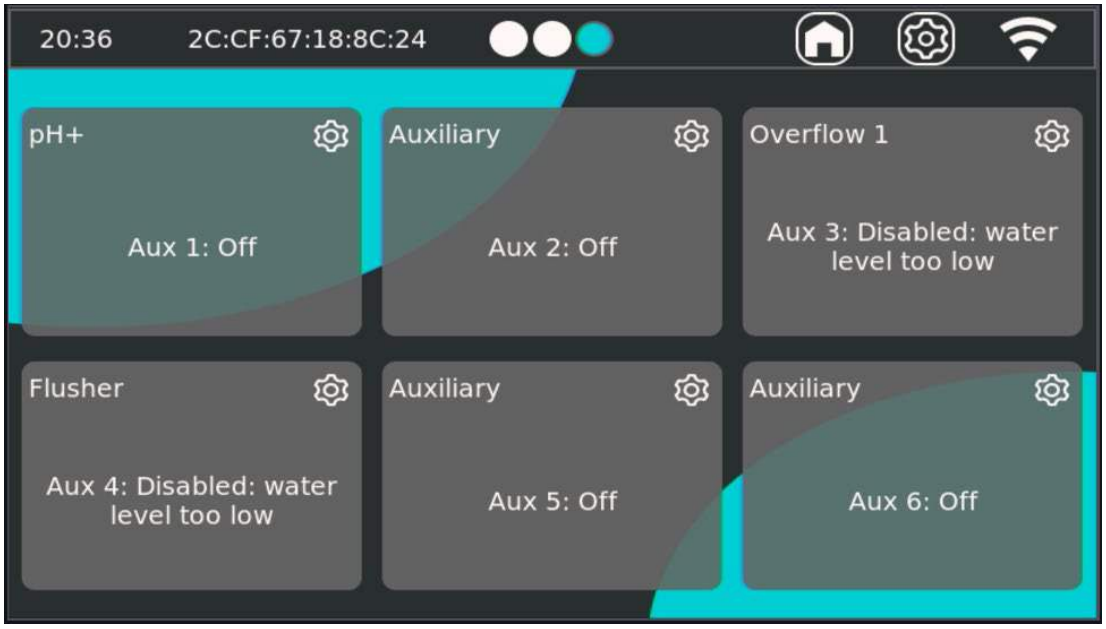

**Aux 3 settings for overflow:**

**For the activation settings, use "default enabled" so that the overflow is enabled by default. A schedule can be used if desired.**

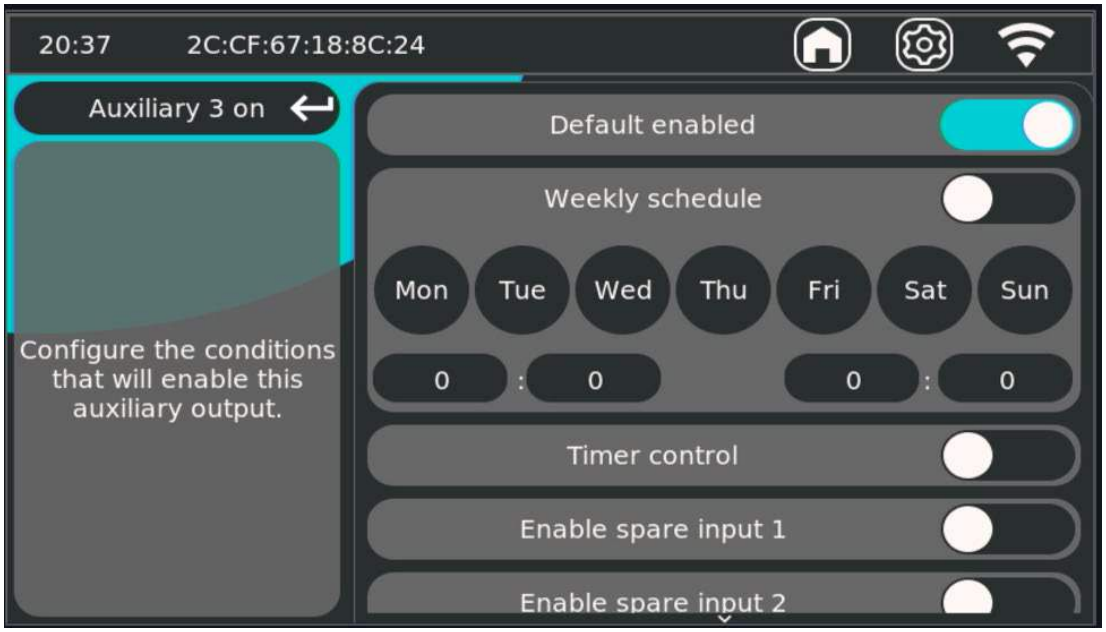


**For the shutdown settings (important to prevent siphoning)**

- **Disable internal cover closed (in case of internal cover, otherwise external cover) – to ensure that the overflow stops when the deck is closed**
- **Disable on water level too low – important to prevent dry running. Stops the overflow when the water level is too low (WLS-3 required)**
- **Disable no flow – to stop the overflow when the filter pump is off; otherwise, the water may siphon.**
- **Disable pump off – to stop the overflow when the filter pump is off; otherwise, the water may siphon.**

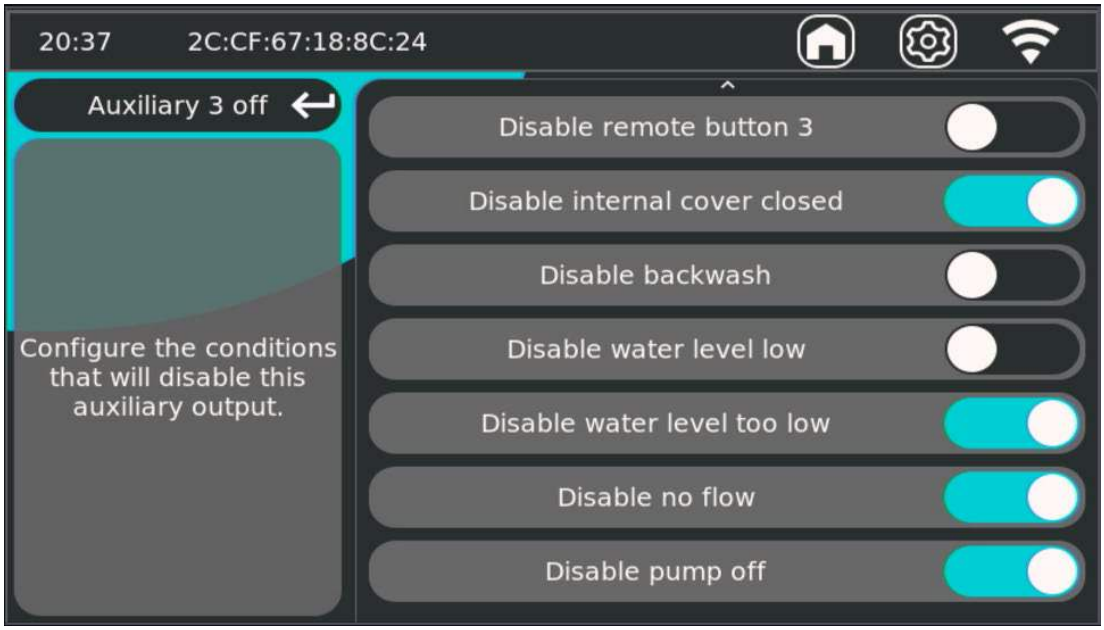

**Aux 4 settings for flusher:**

**For using the flusher, it is best to set the timer control to 3600 seconds (1 hour) per 720 minutes (12 hours) to ensure the buffer tank is flushed even when the deck is closed for an extended period. In this case, 1 hour every 12 hours**
**The settings can be adjusted as needed.**

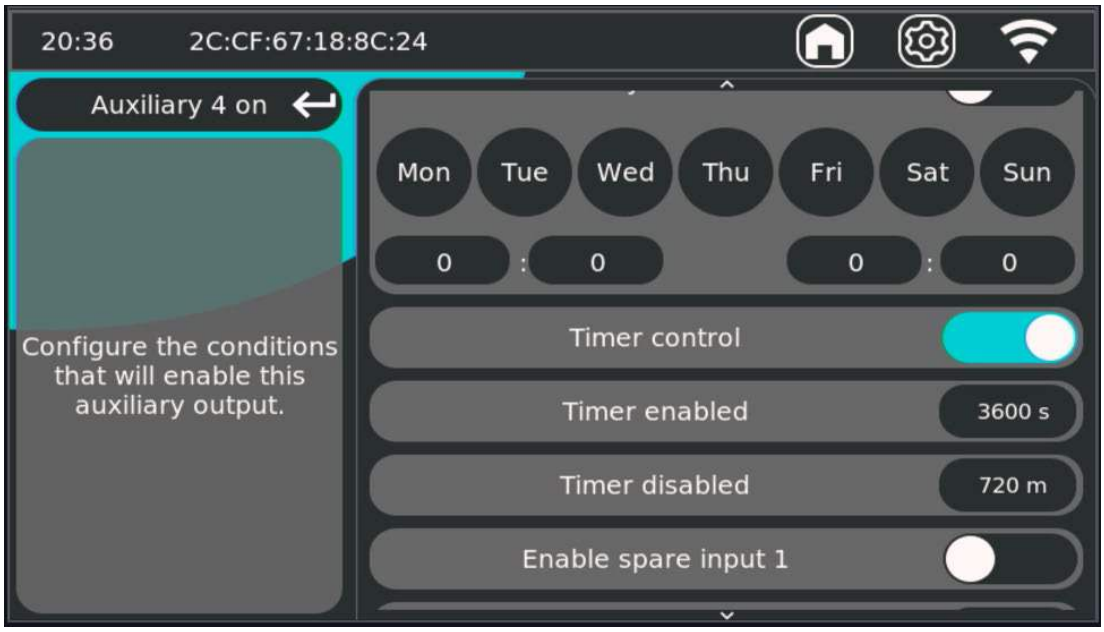


**For the shutdown settings (important to prevent siphoning)**

- **Disable on water level too low – important to prevent dry running. Stops the overflow when the water level is too low (WLS-3 required)**
- **Disable no flow – to stop the overflow when the filter pump is off; otherwise, the water may siphon.**
- **Disable pump off – to stop the overflow when the filter pump is off; otherwise, the water may siphon.**

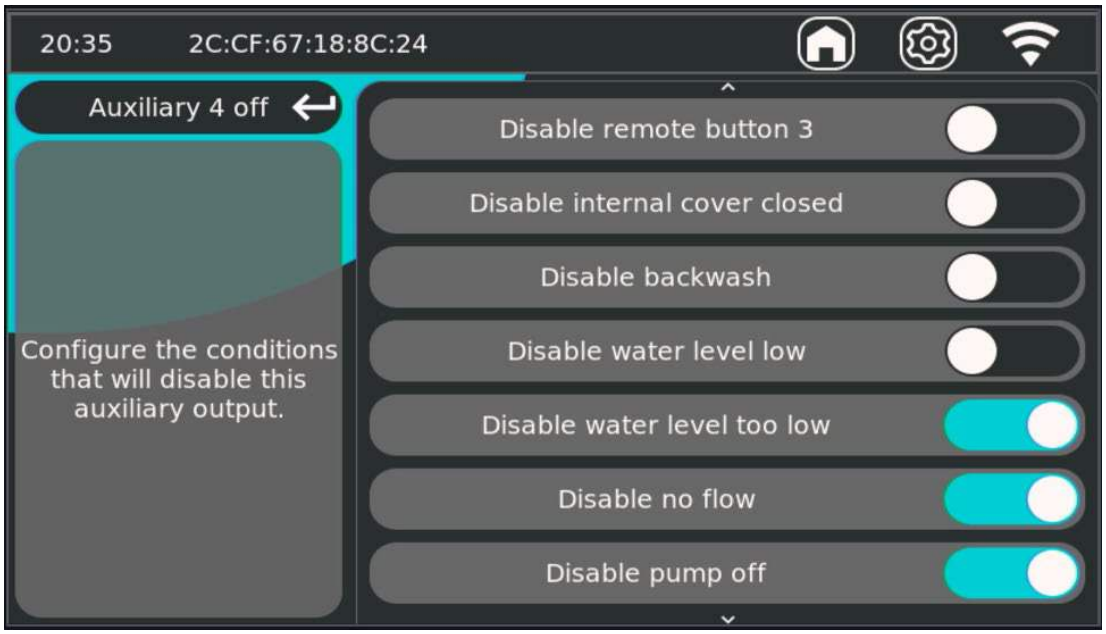

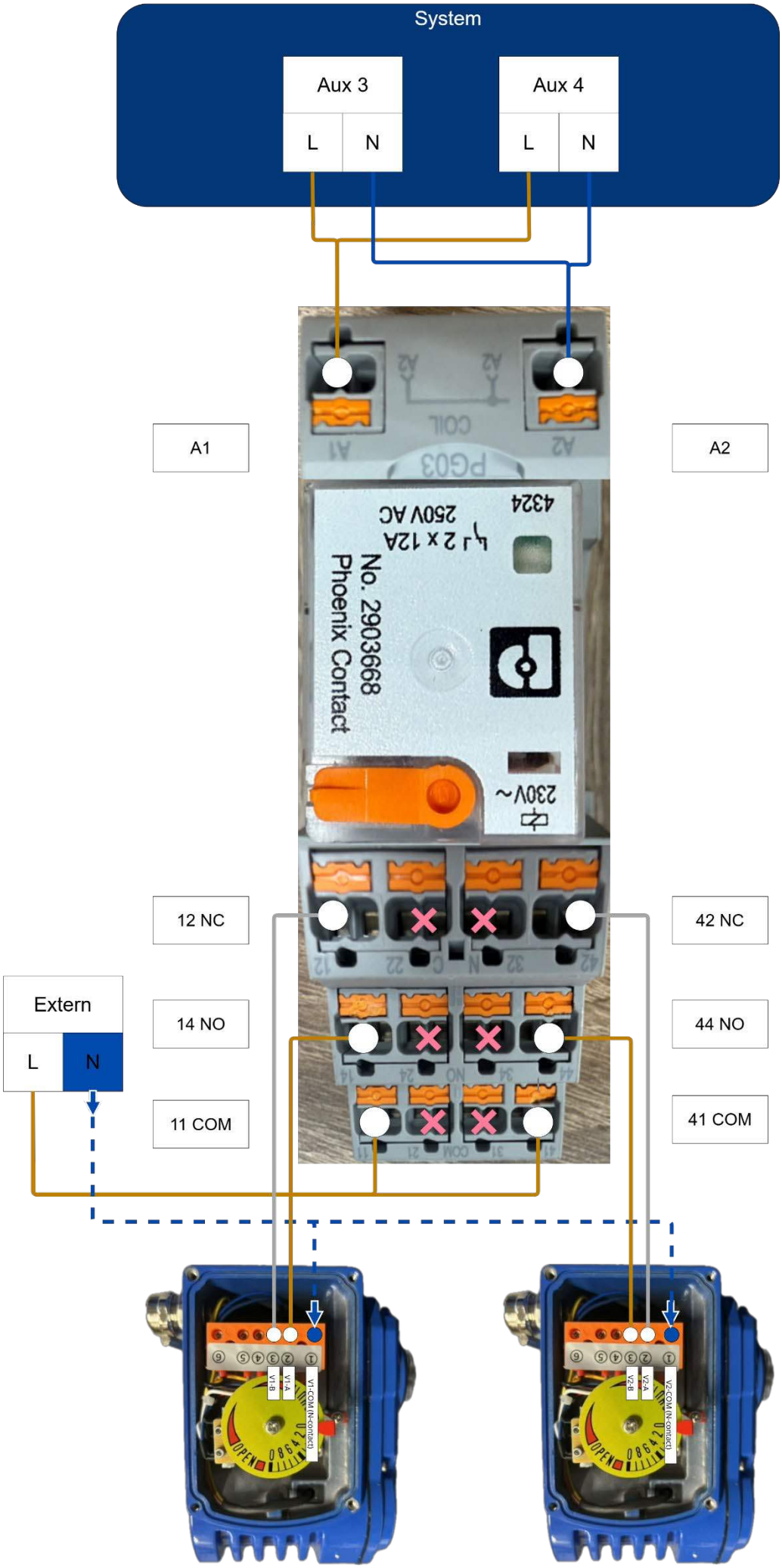
System
Aux 3
L
N
Aux 4
L
N
A1
A2
12 NC
42 NC
Extern
L
N
14 NO
44 NO
11 COM
41 COM
No. 2903668
Phoenix Contact
250V AC
4324
230V~

# 5. Setup and Operation

This chapter describes how to operate the Norsup ONE V3 via the touchscreen and the most important settings for each control. The Norsup ONE V3 is designed as a central control system for the pool and can—depending on the configuration—automatically and/or manually control multiple functions, such as filtration, heating, backwash, water replenishment, cover, lighting, water treatment, and auxiliary relays.

## 5.1 General Operation

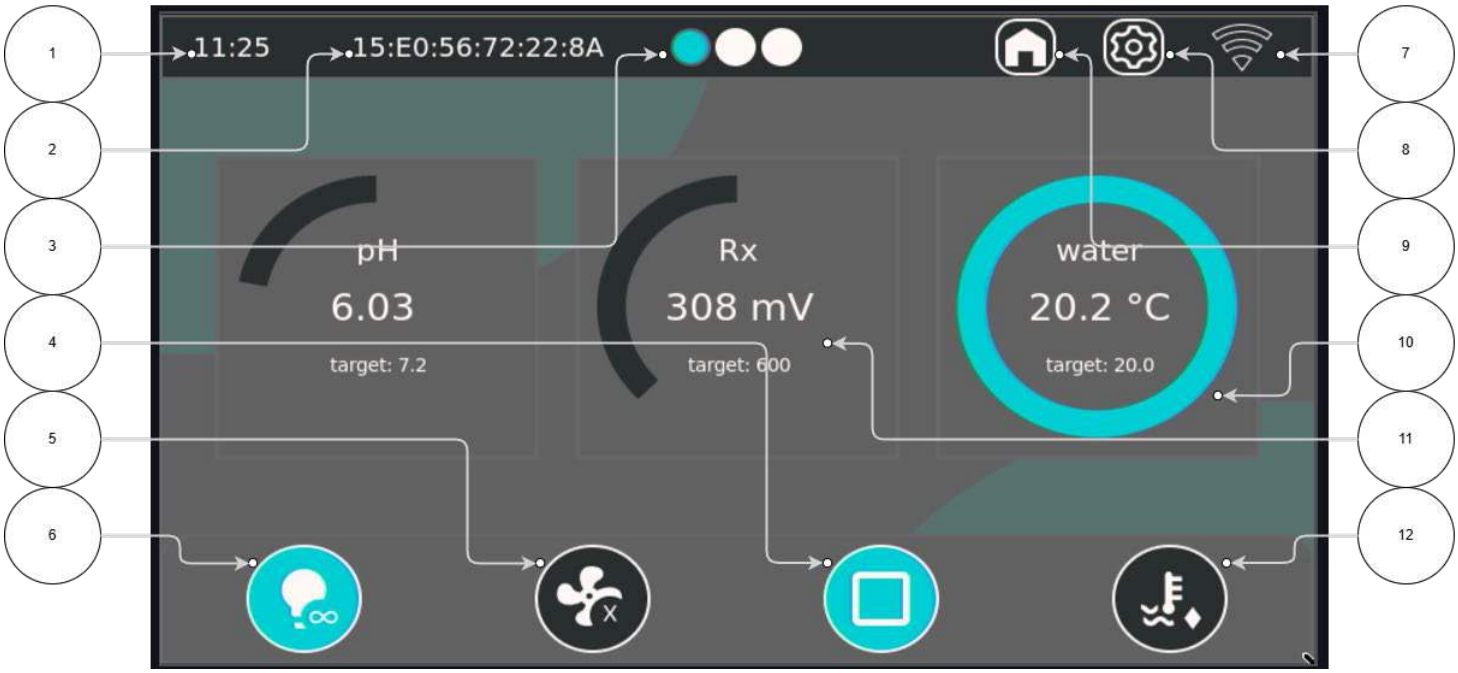


| | |
|---|---|
| 1 | Time |
| 2 | MAC address |
| 3 | Page display |
| 4 | Open/close/stop cover |
| 5 | Filter pump off/schedules/continuous on |
| 6 | Lighting off/schedule/continuous on |
| 7 | Network status |
| 8 | General settings |
| 9 | Home navigation |
| 10 | Water temperature gauge (within desired range) |
| 11 | Rx value meter (outside desired range) |
| 12 | Heating off/schedule/continuous on |

The operation of the Norsup ONE V3 is centered around the **home screen**. From this screen, all controls are directly accessible and the current status is visible at a glance.

**Home screen (overview)**

The home screen typically displays the following components:

- **Water treatment**
- **Filter control** (including backwash)
- **Temperature control**
- **Water Temperature**
- **Air temperature** (if connected)
- **Cover control** (if present)
- **Water supply** (if available)
- **Lighting** (12 VAC and/or external lighting control)
- **Auxiliary relays** (Aux 1 through Aux 5)
- **Messages/warnings**
- **Connection status** (if connected online)

- **Time and date**
- **General settings**

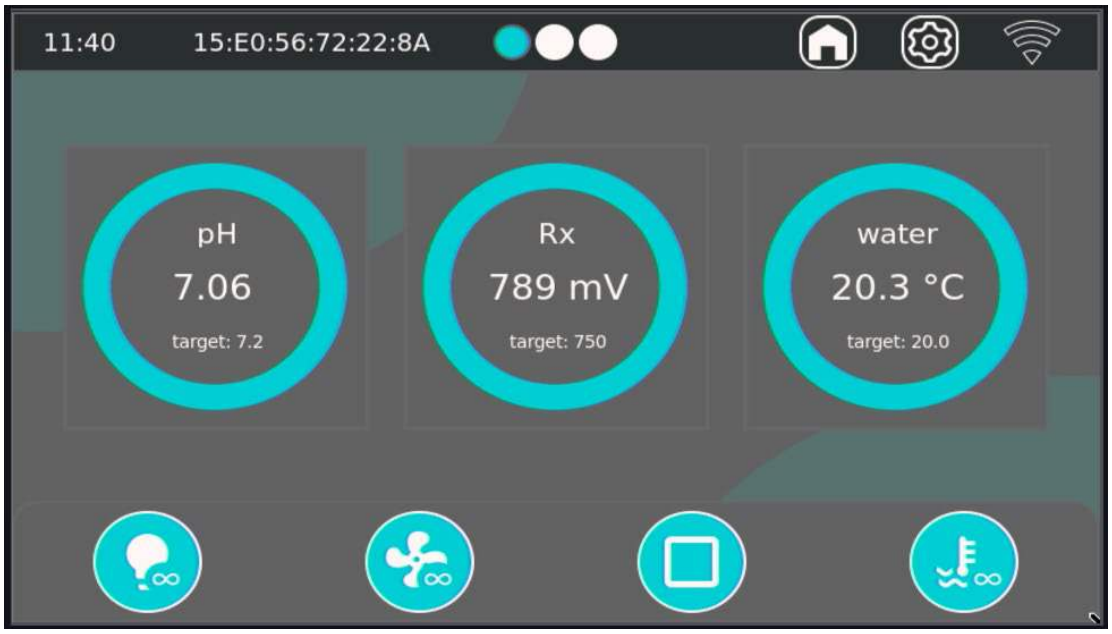


When a measured value falls **within the set (correct) range** , or when a function/control **is actively enabled**, the display on the screen changes to **green/turquoise**.

## ❶¶7¡7.Main.control.screen.

The Norsup ONE V3 features a central **quick-function bar** to quickly stop and resume automation.

When one of the buttons on the quick-function bar is clicked, the system cycles through the following three steps

1. Off
2. Scheme (A – Automatic)
3. Continuous On (∞)

This function is intended, for example, to perform safe maintenance, such as:

- Cleaning a filter basket;
- Temporarily disabling controls;
- Inspecting components.

## ❶¶7¡8.Main.screen¿control.pages.8.and.9

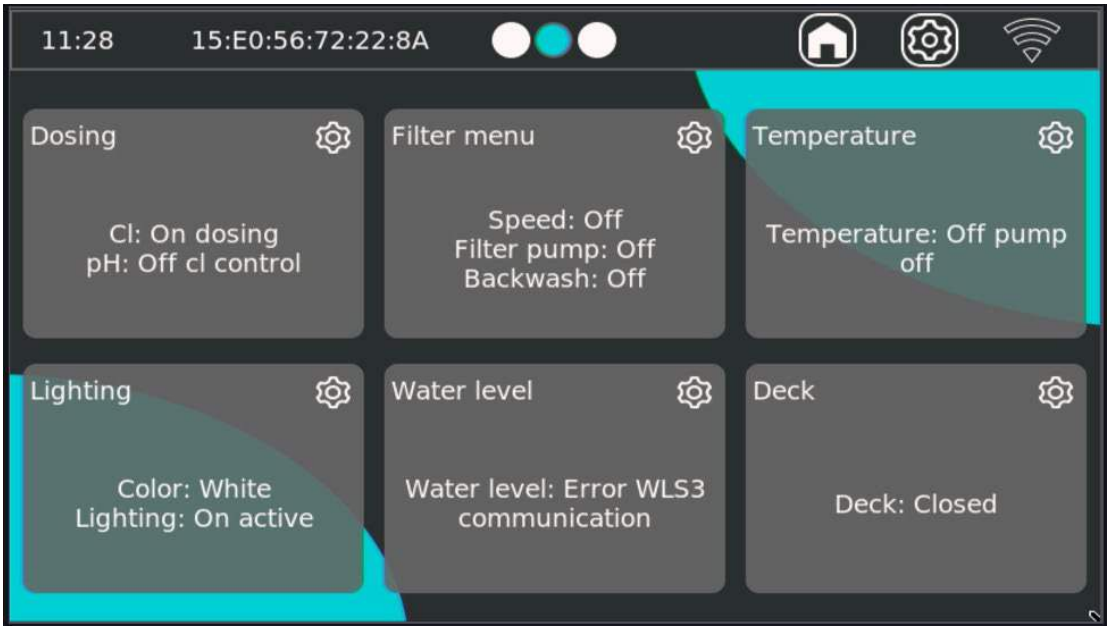


By **swiping left or right** on the home screen, you go to the **second page** with additional blocks and functions.

On the **home screen** , the system's functions are displayed as **blocks** (e.g., dosing, filtration, temperature, lighting, water level, cover). In each block, you can see the **relevant status** of that function at a glance (such as on–off, active, error.message , or closed–open).

Want to view more details or settings? **Tap a block** to open the corresponding menu and view the **detailed information** and controls.

## ❶¶7¡9.Keyboard.explanation

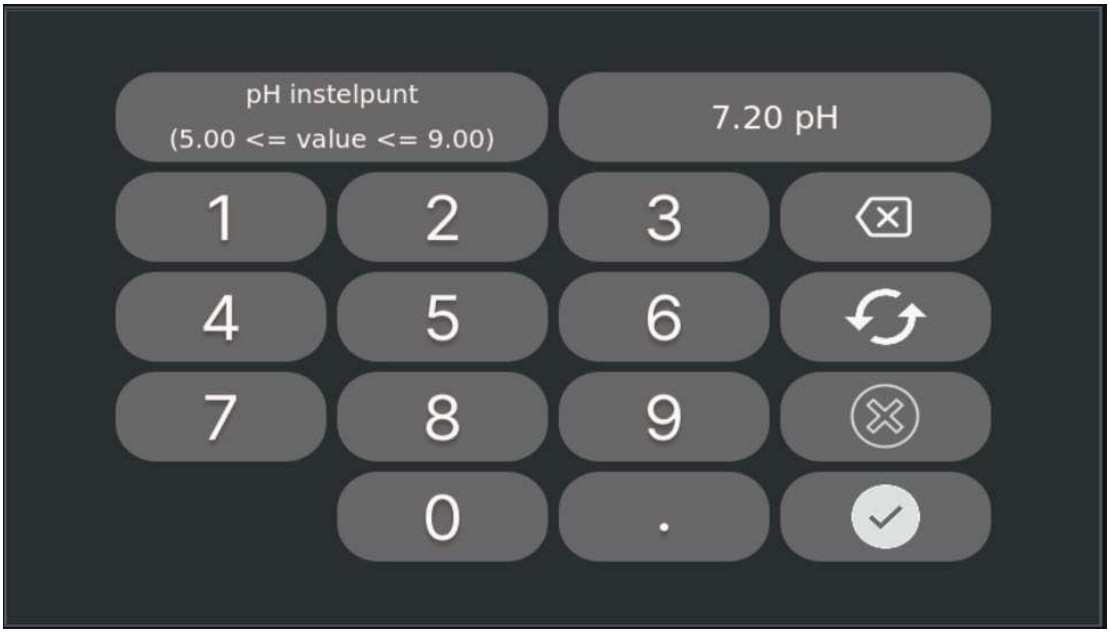


The top left shows what is being set, along with the minimum and maximum settings.

The back button can be used to delete the entry.

The 'Restore' button restores the default value.

The ‘Cancel’ button allows the entry to be completely canceled and will not be saved.

The ‘Confirm’ button confirms the entry and saves it to the system

## 5.2 General Settings

Under General Settings, system parameters are configured, such as:

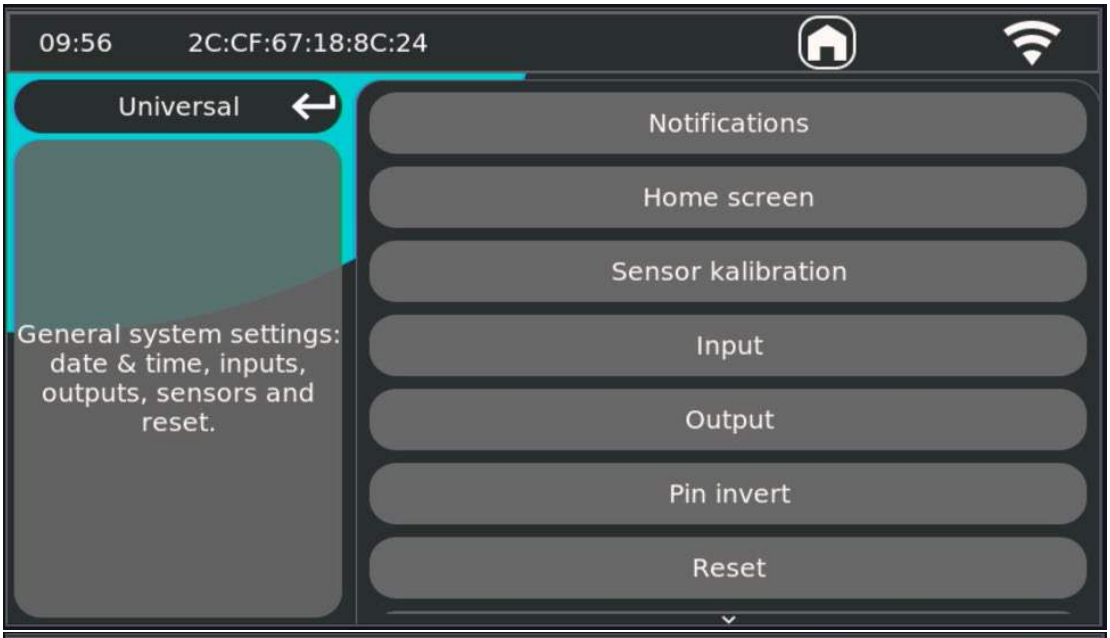


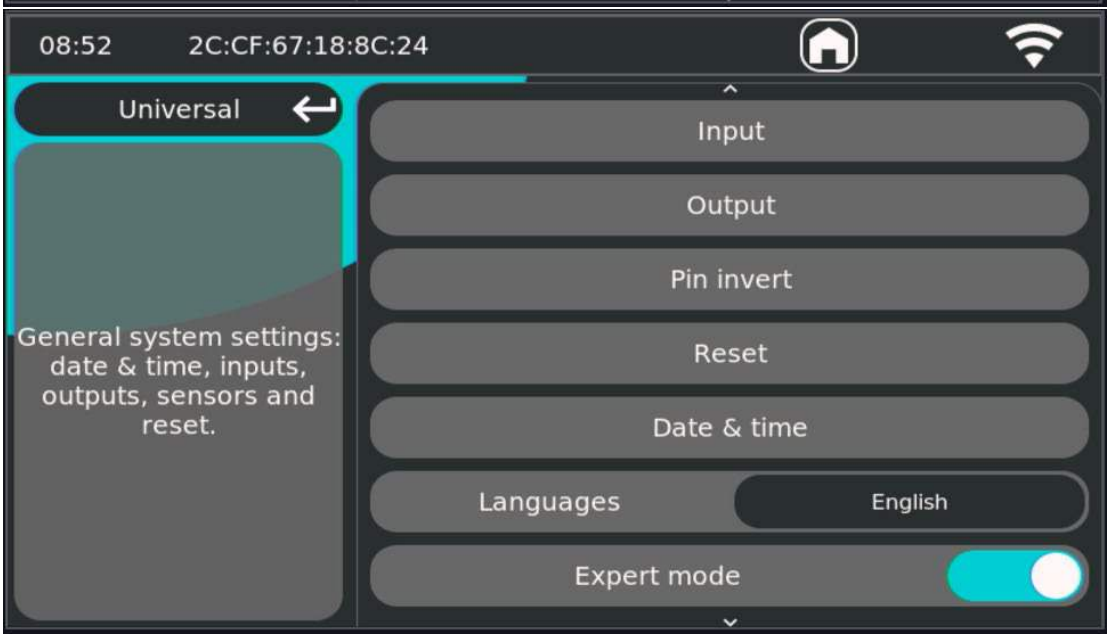


### ❶8¡7.Notifications

This menu provides an overview of all notifications currently active. For certain notifications, controls may not function. The notification is also always displayed in the relevant control unit itself.

### ❶8¡8.Home.screen.(expert)

In this menu, entire controls can be turned on or off. When turned off, the control will disappear completely from the home screen, which can be useful when controls are not in use.

**Note:** Cover control must be enabled when an internal cover control is present.
The ‘deck’ setting is used when a third-party system is used to control the tube motor.

## ❶¡8¡8.Sensor.Calibration.(expert)

**Sensor Filter**

In **Sensor Filter** , you can **adjust** the behavior of sensors (e.g., damping/delay of measured values to reduce fluctuations).
**Do not change these settings**unless a **support representative** explicitly asks you to do so. Incorrect filter settings can lead to **incorrect measurements** and, consequently, **incorrect dosing**.

**Sensor calibration**

In **Sensor calibration** , all sensors can be **calibrated**. The screen provides step-by-step instructions on what to do.
**Follow these steps exactly.** Incorrect calibration can lead to **erroneous readings** and consequently to **incorrect water treatment/dosage**.

**pH calibration**
For pH calibration, **pH 4 and pH 7 buffer solutions** are required.
Always check the **expiration date** and use only clean beakers. Stale or contaminated buffers will result in incorrect calibration.

**Rx calibration (Redox)**
For Rx calibration, a **475 mV** buffer solution is required.
Check the expiration date. An incorrect buffer will result in an unreliable Rx value and affect chlorine control.

**TDS calibration (salinity/conductivity)**
For TDS calibration, a **TDS buffer solution of 3000 ppm** is required.
Check the expiration date. An incorrect TDS calibration can lead to incorrect salt value detection and false alarms or lockouts.

## ❶¡8¡9.Input.(expert)

In the **Input** menu, you configure the system’s **inputs** . This allows you to add additional functions and configure existing inputs (e.g., safety devices, levels, cover sensors, and tank alerts).

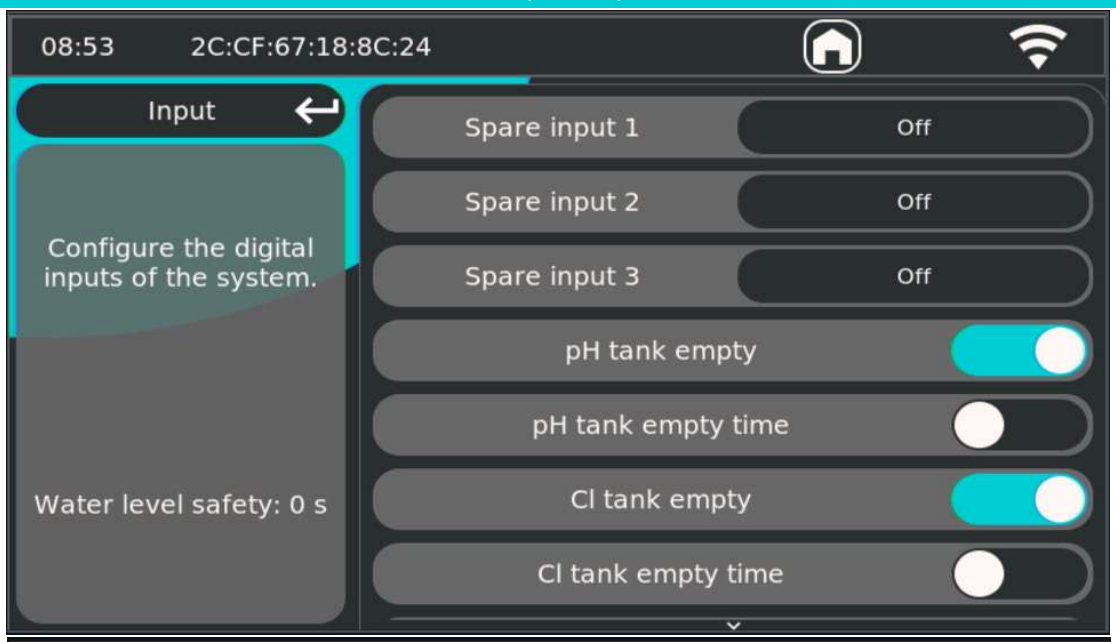


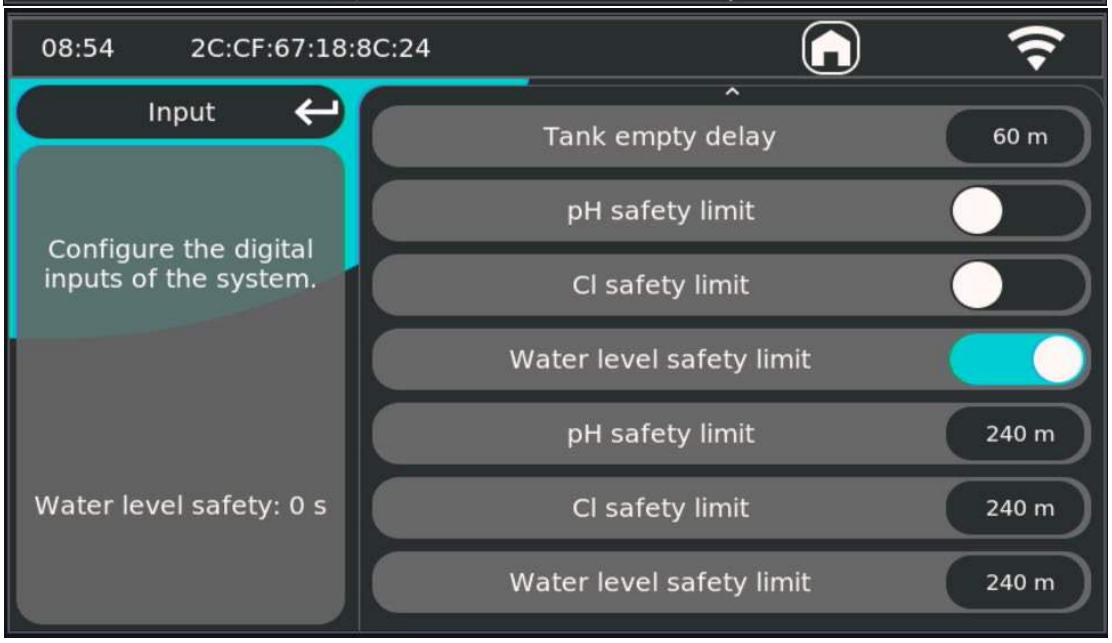


### ❶¶8¡0.Reserved.Input.7-9.(expert)

The circuit board has **3 freely programmable inputs** (Reserved.input.7.through.9). These have no fixed function and can be assigned a function here.

### ❶8¡❶Selection.options.for.Reserved.input.(expert)

- **Off** – input is not used.
- **External off** – External blocking/deactivation of functions (e.g., dosing) via a contact.
- **pH Plus tank** – input is used for detection of a pH+ tank/suction lance (only relevant for pH+/- configurations).
- **Water level too low** – water level "too low" status.
- **Water level low** – water level "low" status.
- **Water level high** – "High" water level status.
- **Water level too high** – "too high" water level status.
- **Deck close sensor** – deck sensor for "closed" detection.
- **Deck open** – input reports "deck open".
- **Deck close** – input signals "deck closed".
- **Deck key** – Key/authorization input for deck operation.
- **Deck pulse** – Pulse input for deck control (e.g., pushbutton).
- **Auxiliary** – general/auxiliary input for additional functions (system-dependent).

### Tank.empty.(suction.lance).settings.(expert)

These options determine whether the system may generate a **tank-empty signal** based on an input, and whether that signal is delayed.

### pH.tank.empty.(expert)

Enables the option to use a **pH tank empty signal**on an input (e.g., suction lance/level contact).

### pH.tank.empty.time.(expert)

Enables a **delayed notification** for pH tank empty. The delay time is determined by **Tank empty delay**.

### Cl.tank.empty.(expert)

Enables the option to use a **chlorine tank empty signal**on an input (e.g., suction lance/level contact).

### Cl.tank.empty.(expert)

Enables a **delayed notification** for chlorine tank empty. The delay time is determined by **Tank empty delay**.

### Tank.empty.delay.(expert)

The **delay time** before a tank empty signal becomes active when tank.empty.time is enabled.

**Note:** The dosing pump must be active for the set delay time before a tank-empty signal is actually generated. A 1-minute delay therefore means that dosing must have been active for 1 minute before the alert is generated.

### Safety.limits.(dosing.safety).(expert)

The safety limits protect against **unlimited continued dosing** (e.g., in case of a malfunction, empty tank, air in the line, or incorrect calibration).

#### Operation (rolling window).

The total dosing time is monitored in a **4-hour rolling window**. This means that the system continuously looks back at the **last 4 hours** and applies the limit values to that period.

### pH.safety.limit.(expert)

Stops pH dosing when the pH dosing has been active for longer than the set **maximum dosing time (minutes)** within the **last 4 hours** .

### Cl.safety.limit.(expert)

Stops chlorine/Rx dosing when the chlorine/Rx dosing has been active for longer than the set **maximum dosing time (minutes)** within the **last 4 hours** .

### Water.level.safety.limit.(expert)

Stops water replenishment if the fill valve has been **active** for longer than the set **maximum activation time (minutes)** within the last 4 hours.

## ❶¦8¡❷Output.(expert)

In the **Output** menu, you can link system functions to an **auxiliary relay (AUX)**. This allows you to activate additional relays or assign a function to a free AUX output.

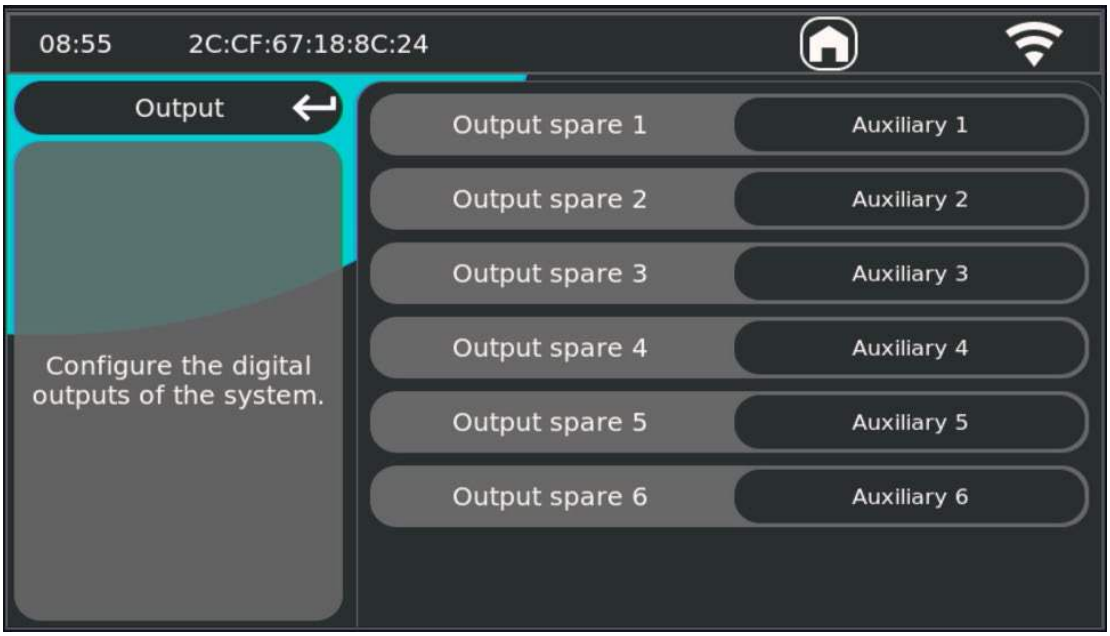


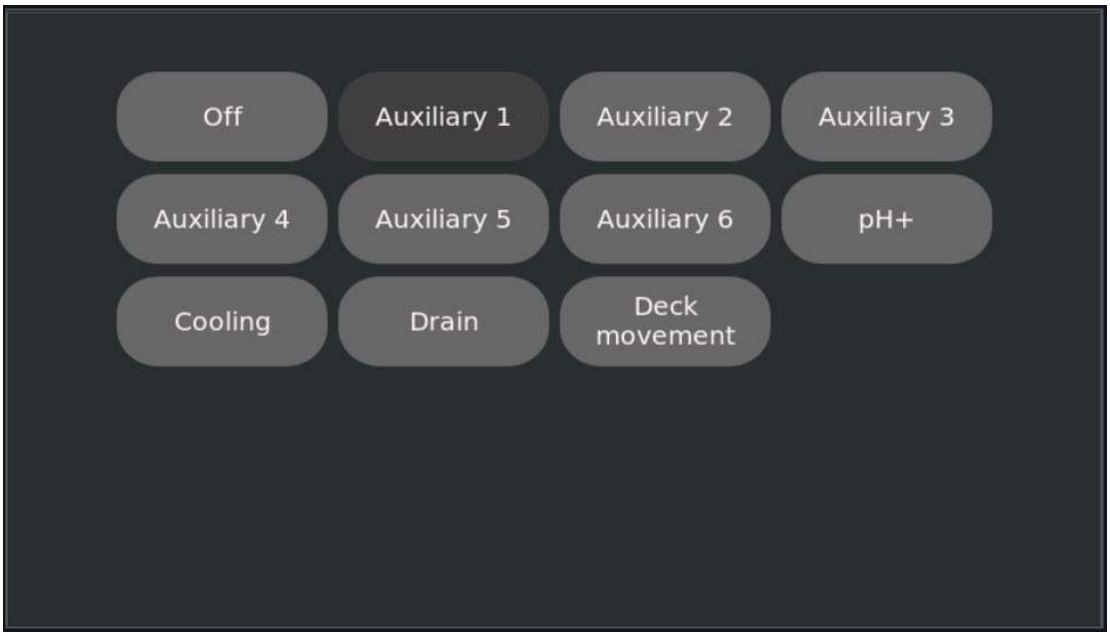


**Options**

### Off.(expert)

No function is linked to this output.

### Aux.7.- .Aux.❷(expert)

Links this output to an auxiliary relay (**AUX 1 through 6**).

#### Link AUX to another AUX (copy)

Auxiliary relays can also be linked to other auxiliary relays. In that case, the linked auxiliary relay exactly **copies** the switching behavior of the selected auxiliary relay.
**Example:** if **AUX 2, AUX 3, AUX 4, and AUX 5** are linked to **AUX 1**, they all switch simultaneously with AUX 1. When AUX 1 is supposed to turn on according to the control scheme, all linked AUX outputs also turn on.

**Linking functions:**

### pH>.(expert)

Only applicable when **pH+/-**is selected for dosing.
Here you select which auxiliary relay (AUX) is used for the **pH+ dosing**.
**Note:** if dosing is set to **pH+ only** (i.e., not pH+/-), the standard **pH- output**is used as the pH+ output. In that case, the selection in this menu has no effect.

### Cooling.(expert)

Only applicable when **Heating & Cooling**has been selected for the heating control.
Here you can link an auxiliary relay to the **cooling function**. The default output for **heating** remains unchanged.

### Drain.(expert)

Only applicable when **Filling & Draining**is selected for the makeup control.
Here you connect an auxiliary relay to the **drain function**. The default output for **filling** remains unchanged (solenoid).

### Deck.Movement.(expert)

Connects an auxiliary relay to the **deck movement**control. The relay is **activated as long as the deck is in motion**.

### ❶¡8¡❸Pin.Invert.(expert)

In the **Pin invert** menu, you can **reverse**the operation of inputs and outputs.
When an input or output is inverted, it works **exactly the opposite way**:

- **On becomes Off**
- **Off becomes on**

This is used when a connected relay, actuator, or external controller expects **reversed logic** (for example, normally closed instead of normally open).

**Please note!**

Pin invert is a **system setting**. An incorrect invert setting causes an output or sensor to respond **exactly the opposite way** (e.g., pump on when it should be off, or "tank empty" when it is full). Only adjust this if you are certain which logic (NO/NC or active-high/active-low) the connected component uses.

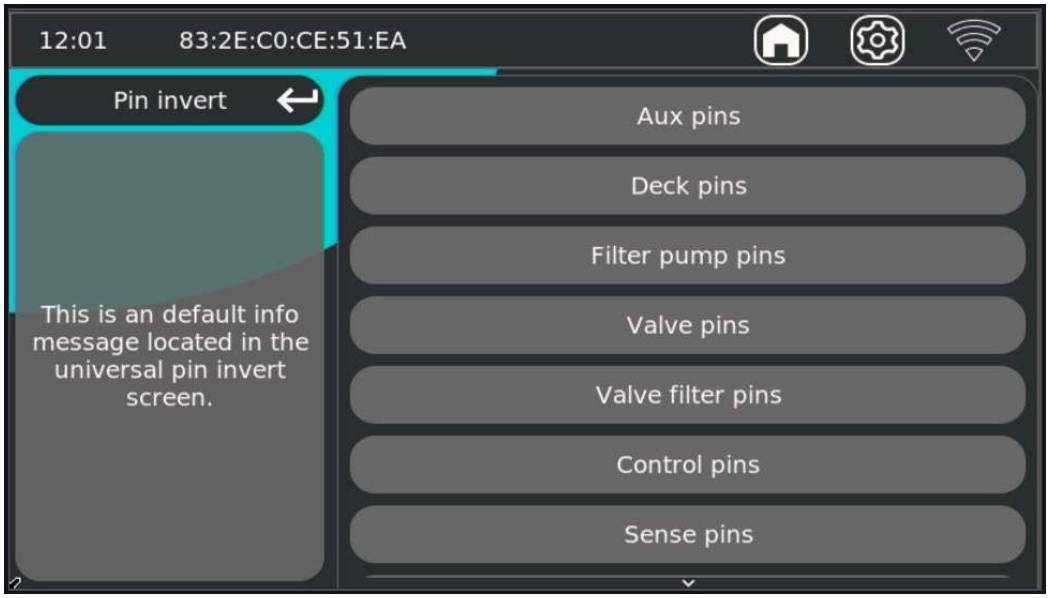


### Invert.auxiliary.(Aux.pins).(expert)

Here you can invert the AUX outputs individually:

- **Invert Aux Pin P1** – Invert AUX output P1
- **Invert Aux Pin P2** – invert AUX output P2
- **Invert Aux Pin P3 Power** – invert the power/switch output of AUX P3 (power)
- **Invert Aux Pin P4 Power** – invert the power/switching output of AUX P4 (power)
- **Invert Aux Pin P5** – invert AUX output P5

### Invert.deck.pins.(Deck.pins).(expert)

Here you invert the deck signals/outputs:

- **Invert Deck Ext 1** – Invert external deck open pin 1

- **Invert Deck Ext 2** – invert external deck-closed pin 2
- **Invert Deck Lock** – invert deck lock output/input (installation-dependent)

### Invert.filter.(Filter.pump.pins).(expert)

Here you invert the filter pump outputs:

- **Invert Pump Power** – Invert the pump's main switch (on/off)
- **Invert Pump Speed 1** – invert speed output 1
- **Invert Pump Speed 2** – invert speed output 2
- **Invert Pump Speed 3** – Invert speed output 3
- **Invert Pump Speed 4** – Invert speed output 4

### Invert.valve.pins.(Valve.pins).(expert)

Here you invert the valve/supply outputs:

- **Invert Valve Sewer** – Invert the drain/"sewer" valve output
- **Invert Valve Solenoid** – invert the solenoid/fill valve output (e.g., refill)

### Invert.valve.filter.(Valve.filter.pins).(expert)

Here you invert the filter valve(s):

- **Invert Valve Filter P1**
- **Invert Valve Filter P2**
- **Invert Valve Filter P3**
- **Invert Valve Filter P4**
- **Invert Valve Filter P5**
- **Invert Valve Filter P6**

- **Invert Valve Filter Power** – Invert the power/switching output of the filter valve(s)

### Invert.control.(Control.pins).(expert)

Here you invert controls that function as "control" outputs:

- **Invert Heating Control** – Invert heating control
- **Invert Light Control** – invert light control
- **Invert pH Power Control** – Invert pH dosing power/enable output
- **Invert CL Control Power** – invert chlorine/CL power/enable output
- **Invert Flake Control** – Invert flocculant/"flake" control (if used)

### Invert.sense.(Sense.pins).(expert)

Here you invert inputs/sensor logic (e.g., NO ↔ NC contacts):

- **Invert Flow Sense** – Invert flow sensor input
- **Invert CL Level Sense** – invert chlorine level/suction lance input
- **Invert pH Level Sense** – Invert pH level/suction lance input
- **Invert Deck Close Sense** – invert deck-close sensor input
- **Invert Float Switch Sense** – invert float switch input (water level)

### Invert.reserved.(Reserved.pins).(expert)

Here you invert the free/reserved pins:

- **Invert Reserved Pin 1**
- **Invert Reserved Pin 2**
- **Invert Reserved Pin 3**

## 5.3 Dosing Settings

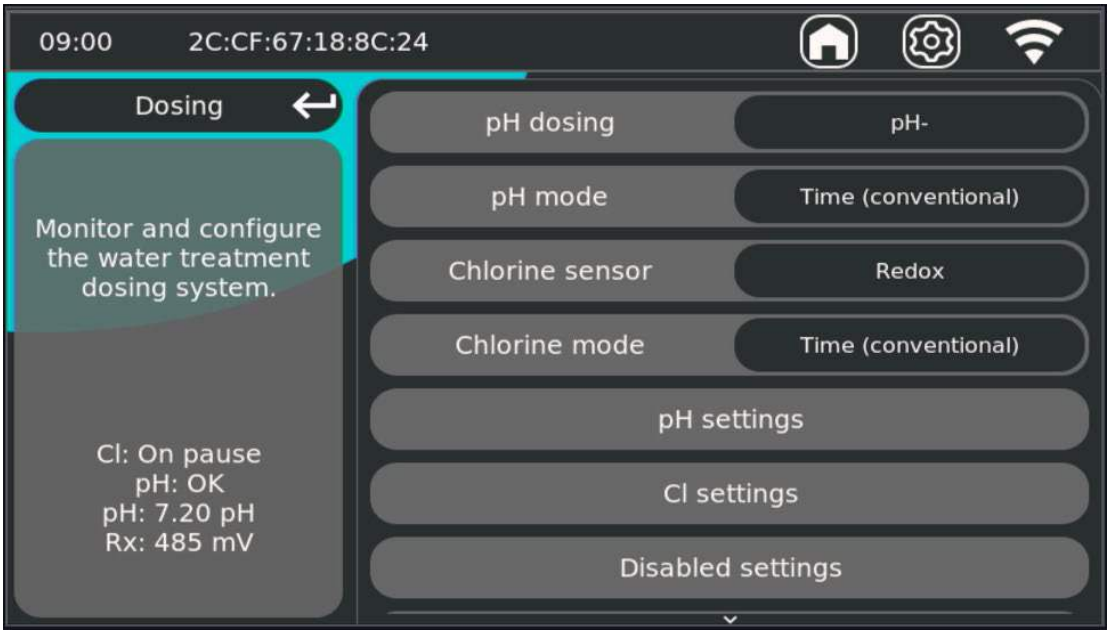


In the dosing menu, you set **how** the system controls pH and chlorine. On the left, you see the **status and measured values**; on the right are the settings.

For sensor calibration

### ❶9¡7.pH.dosing.(expert)

Determines **the pH correction** the system can dose.

**Off** – pH dosing is disabled.

**pH** – Doses acid to lower the pH.

**pH+** – doses base to raise the pH**. NOTE:** The output for pH- becomes the output for pH+.

**pH+/-** – supports both pH- and pH+ and, depending on the control and settings, can correct in both directions. An auxiliary relay must be assigned for this purpose. **5.2.6 Output (expert)**

### ❶9¡8.pH.mode.(expert)

Determines **how** the pH dosing is controlled.

**Time (continuous)** – doses in pulses based on a set **dosing time** and **pause time**. The pause gives the system time to measure the effect of the dose before the next pulse starts.

**Hysteresis** – doses (on/off) based on a **bandwidth around the setpoint**. The system doses until the pH falls within the set margin (hysteresis) around the setpoint.

### ❶9¡9.Chlorine.sensor.(expert)

Determines **which measurement method/sensor** is used as a reference for chlorine control.

**Off** – Cl dosing is disabled.

**Redox**: uses the Rx value (mV) as the control value for disinfection.

**Free chlorine**: Uses an external sensor to measure free chlorine in ppm.

### ❶¦9¡0.Chlorine.mode.(expert)

Determines **how** the Cl dosage is controlled.

- **Time (Conventional)** – doses in pulses based on a set **dosing time** and **pause time**. The pause gives the system time to measure the effect of the dose before the next pulse starts.
  - **The default settings are suitable for a 60 $m^3$ pool using conventional pH chlorine.**
- **Hysteresis (Electrolysis/Hydrolysis)** – doses (on/off) based on a **bandwidth around the setpoint**. The system doses until the Cl falls within the set margin (hysteresis) around the setpoint.
  - **Suitable for electrolysis and hydrolysis.**
- **Smart mode (Cl dosing)** – automatic control in which the system determines the **dosing time** within a set range. The greater the difference between the measured Cl and the setpoint, the more active/aggressive the dosing; as the system approaches the setpoint, the control becomes more gradual to limit overshoot.
  - **Not suitable for electrolysis and hydrolysis!**

### ❶¦9¡❶pH.settings.(pH.dosing)

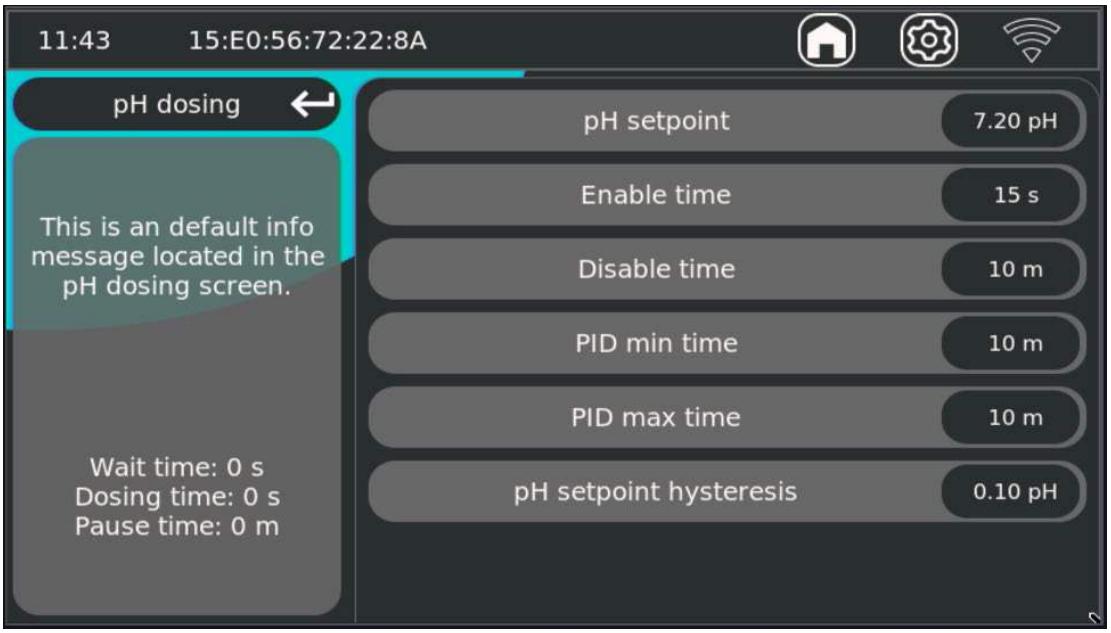


### pH.setpoint

The desired pH value that the system aims to maintain.

### Dosing.time.(only.in.mode.time).(expert)

The **dosing time per pulse** (how long the dosing pump is on during a single dosing action).
Used in Time.modeand as a base/minimum within PID (depending on your implementation).

### Pause.time.(expert)

The **pause time after a dosing** (how long the system waits before the next dosing pulse is allowed).
Purpose: to allow for mixing/delay so the system can first measure the effect and prevent overshoot.

### pH.setpoint.hysteresis.(expert)

The **bandwidth around the setpoint** within which the system **does not** correct (dead zone).
Helps prevent oscillation/continuous switching.

## ❶9¡❷Rx.settings.(Chlorine.dosing.–.Redox)

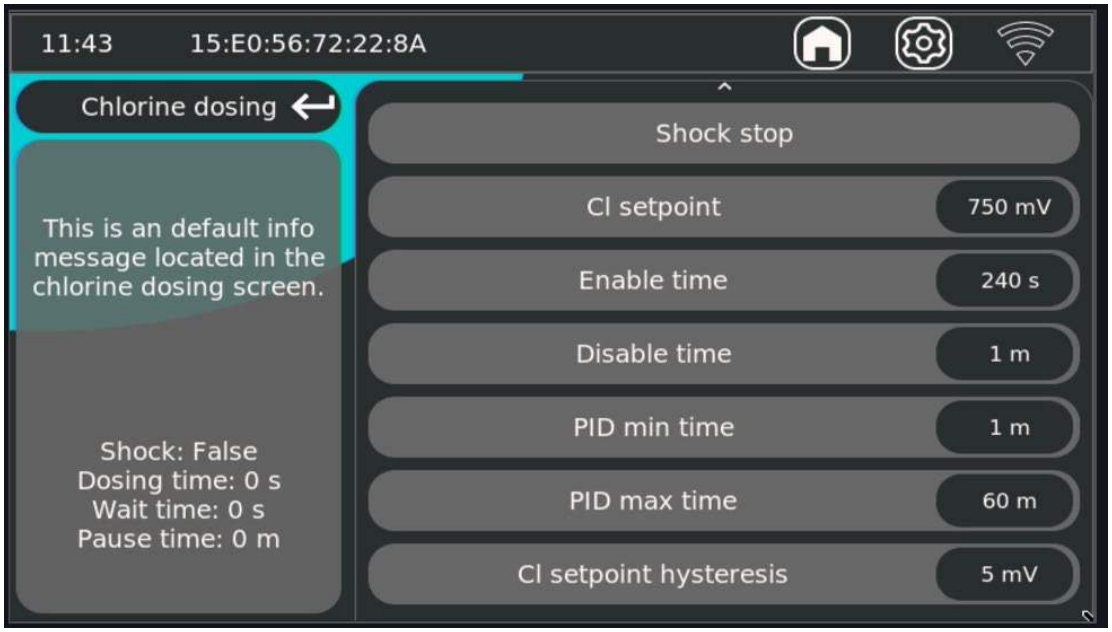


### Shock.start–stop.(only.if.Shock.is.active)

Starts/stops an active **Shock function**(temporary increased dosing), so that the system returns

### Cl.setpoint

The desired **Rx value (mV)** that the system regulates to.

### Dosing.time.(only.in.Time.mode).(expert)

The **dosing time per pulse** (how long the chlorine control is active during a single dosing action).
Used in **Time mode.**

### Pause.time.(expert)

The **pause time after a dosing** (how long the system waits before the next dosing pulse is allowed).
Purpose: to give the system time to measure the effect and prevent **overshoot/oscillation** .

### Smart.mode.min¡.dosing.time.(only.in.Smart.mode).(expert)

The **minimum time setting** within which the PID control may select the **dosing times** .
→ Limits how “short” and thus how aggressively the system can react.

### Smart.mode.max¡.dosing.time.(only.in.smart.mode).(expert)

The **maximum time setting** within which the PID control may select the **dosing times** .
→ Limits how “long” a dosing action may be.

### Cl.setpoint.hysteresis.(expert)

The **bandwidth around the setpoint** within which the system does not correct (dead zone).
Helps prevent oscillation/continuous switching.

## ❶¦9¡❸Disabled.settings.(expert)

Overview of functions/settings that are **disabled** in this installation. Not all functions are always available.

Note: if one of the active blocks becomes “true,” dosing remains off until the relevant condition is resolved.

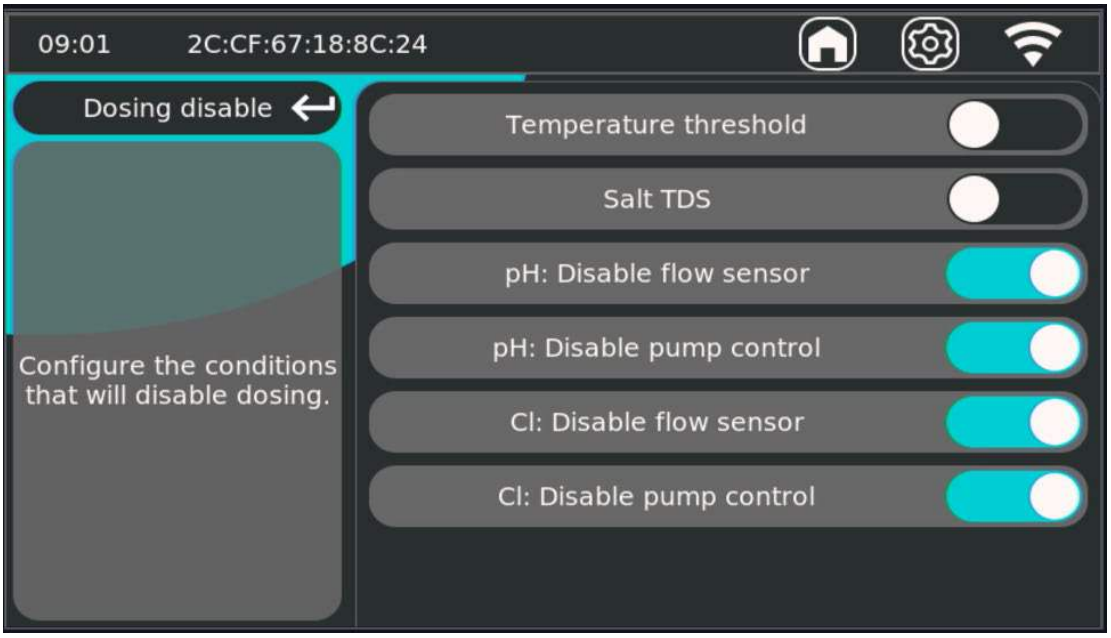


### Temperature.threshold.(expert)

Disables dosing when the water temperature falls **below the set threshold** .

### Salt.TDS.(expert)

Disables dosing when the **salt/TDS level** falls outside the permitted range (based on the set warning/error limits).
Note! When this setting is off, the TDS value will NOT be displayed, nor will the settings for it in the

### Disable.on.flow.sensor.(expert)

Disables dosing when the **flow sensor** does not detect (sufficient) flow.

### Disable.on.pump.control.(expert)

Disables dosing when the **pump control** indicates that the filter pump is off.

## ❶¡9¡❹General.settings.(expert)

**Combined settings** contain parameters that **affect both pH and Rx/chlorine control**. These are joint conditions and correction factors that ensure dosing remains stable, safe, and predictable.

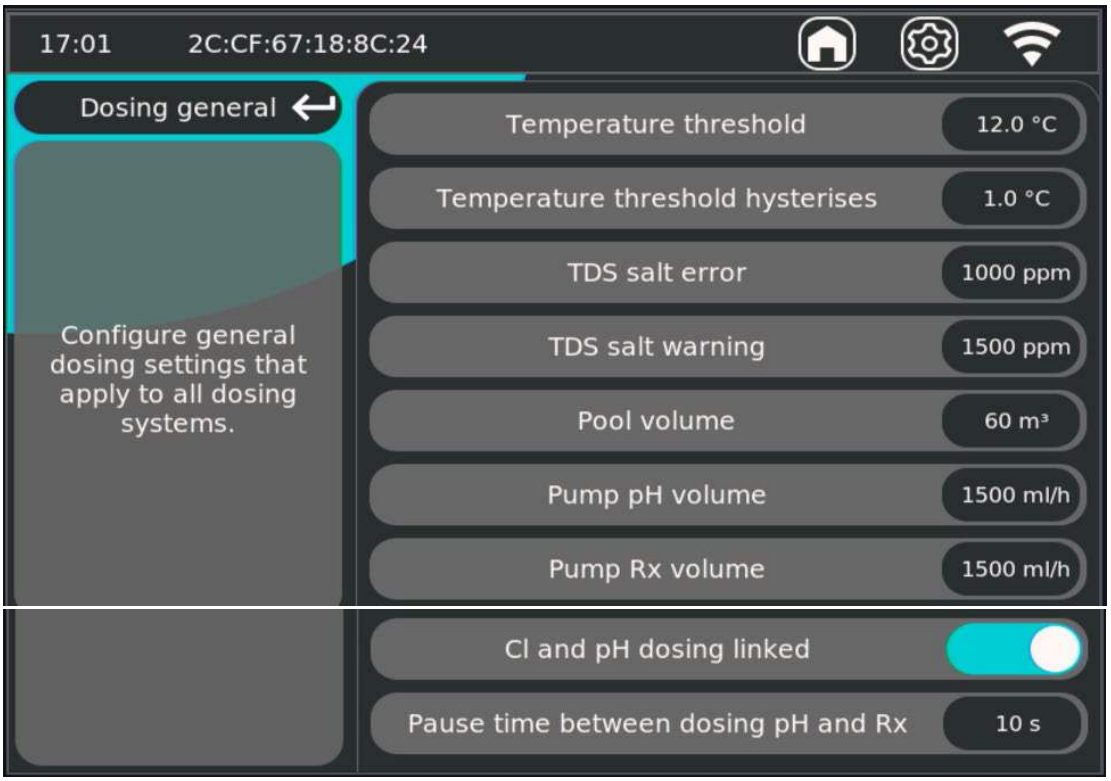


### Temperature.threshold.(expert)

The minimum water temperature (°C) at which dosing is permitted.
When the water temperature falls **below this value** , the system stops dosing and dosing remains blocked until the temperature rises **above the set threshold** again.

### Temperature.threshold.hysteresis.(expert)

Specifies the switching range for the temperature threshold to prevent oscillation.

### TDS.salt.error.(expert)...

Threshold value (ppm) at which the system issues a **salt/TDS error message** .
Used to indicate that the salt content is outside the permitted range. Dosing stops.

### TDS.salt.warning.(expert)...

Threshold value (ppm) at which the system issues a **warning** for the salt/TDS level.
This is an early warning before an error threshold is reached. Dosing continues.

### Pool.volume.(expert)...

The pool volume ($m^3$).
Used for calculating the shock function.

### Pump.pH.volume.(expert)...

Capacity of the **pH dosing pump** (ml/h).
This allows the system to better estimate the dosage and convert from “time” to “quantity”.

### Pump.Rx.volume.(expert)...

Capacity of the **Rx/chlorine dosing pump** (ml/h).
Used for the same conversion and dosing logic as for pH.

### Cl.and.pH.dosing.linked.(expert)

This.setting.indicates.whether.the.pH.and.Cl.controls.are.linked.and.therefore.will.never.dose.simultaneously¡.When.this.is.turned.off?pH.and.Cl.can.dose.simultaneously?suitable.only.for.electrolysis.and.hydrolysis¡

### Pause.time.between.dosing.pH.and.Rx.(expert)...

Wait time between pH dosing and Rx/chlorine dosing (s).
Prevents both agents from being dosed simultaneously or too soon after each other, which can cause undesirable reactions, measurement errors, and instability.

## 5.4 Filter Control

In **Filter Control** , you manage all settings related to the **filter pump**, **pump speeds** , and (if present) **backwash** and **valve control**.

**Filter menu**

**The Filter menu** opens the three main sections:

- **Filter pump settings** – pump selection and on/off logic
- **Backwash settings** – backwash and configuration
- **Valve control settings** – valves (installation-dependent)

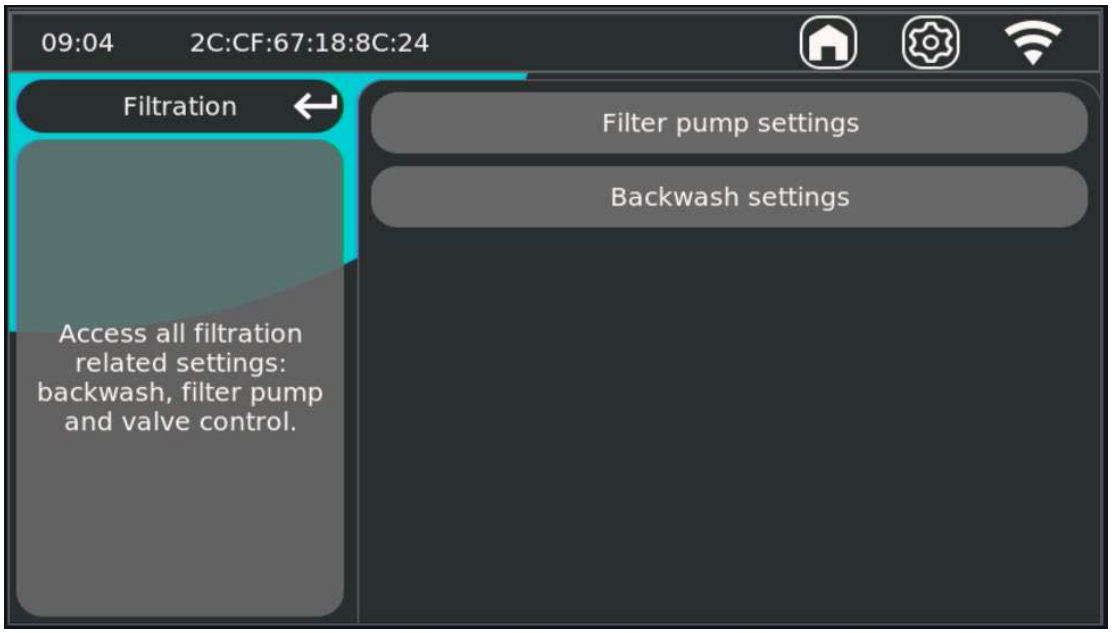


### ❶0¡7.Safety.and.Responsibilities.(Filter.Control)

**CAUTION – The filter pump determines the safety of the system**
The filter pump is essential for the proper operation of multiple functions (including water treatment, heating/cooling, backwash, and safety features). An incorrect setting can lead to **stagnant circulation**, **incorrect water parameters**, **malfunctions** , or **damage to equipment**.

**CAUTION – Risk of continuous operation or insufficient filtration**

- Insufficient filter hours can lead to **poor water quality** and unstable dosing.
    - Rule of thumb: water temperature / 2 = filter hours per 24 hours
- Unnecessary continuous operation increases **energy consumption**and **wear** , and can cause undesirable side effects under incorrect conditions (e.g., unnecessary heat dissipation or additional flow).

**CAUTION – Schedules and priority (misinterpretation = incorrect behavior)**
Schedules may overlap. In case of overlap, **priority** is always based on the schedule number (1 is highest, 3 is lowest).
If schedules are set incorrectly (days, times, or priority), the pump may run **at unexpected times** or **fail to run**. Therefore, always check the daily schedule and the current pump status after configuration.

**NOTE – Temperature safeguards depend on sensor placement**
Frost and overheat functions only work reliably with a correctly installed outdoor temperature sensor:

- Install the sensor **outdoors**, out of direct sunlight and preferably **in the shade**.
  An incorrectly placed sensor can lead to **unnecessary activation** or **failure** to activate safety features.
- These functions are intended as **support and risk mitigation**, but **do not** constitute a fail-safe or absolute guarantee against errors or emergencies

**CAUTION – Backwash can block the pump/valves**
During backwash (and valve control), there may be situations in which the pump is intentionally **blocked** (e.g., waiting for valve position). In such cases, do not force schedules or continuous operation (e.g., directly on the filter pump) without first resolving the cause.

### ❶0¡8.Filter.pump.settings

In the **Filter pump settings** menu, you manage the filter pump settings. On the left side of the screen, you see the current status of the pump; on the right, you select the settings menus.

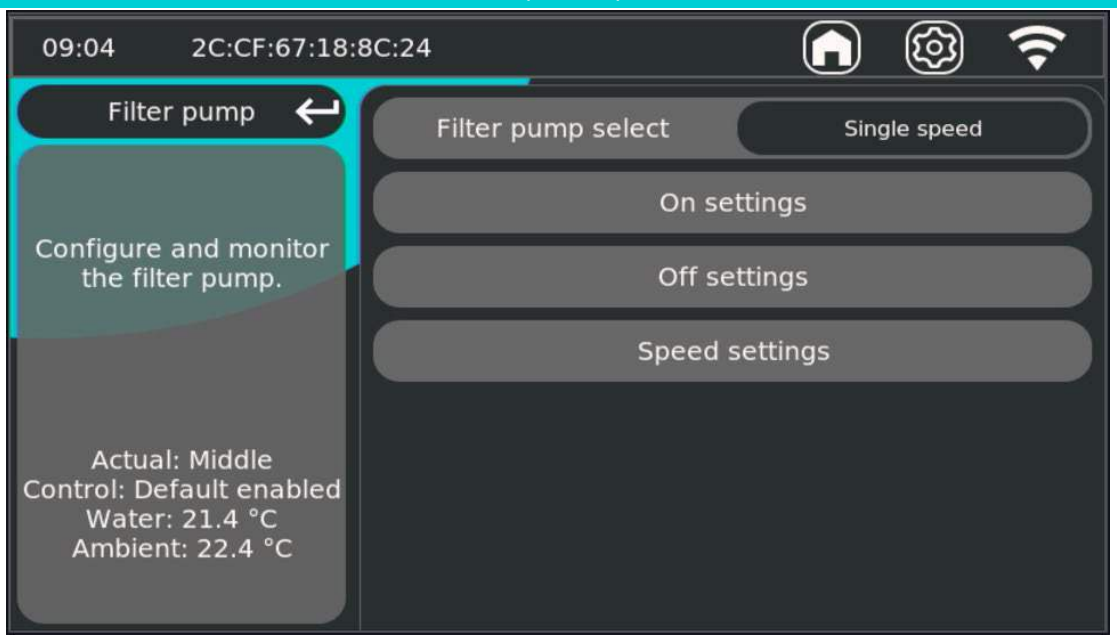


### ❶0¡8¡7.Filter.pump.select.(expert)

Select the pump configuration here. This selection determines which control method the Norsup ONE V3 will use to operate the filter pump.

- single on/off
- multiple speeds
- External control via digital inputs
- Communication-controlled pumps (depending on brand/type)

## ❶0¡8¡8.On.settings.

Settings that determine **when** and **why** the pump turns on (e.g., continuously on, schedules, frost/overheat protection). This is an important feature of the Norsup ONE V3 and offers many options, which are explained below.

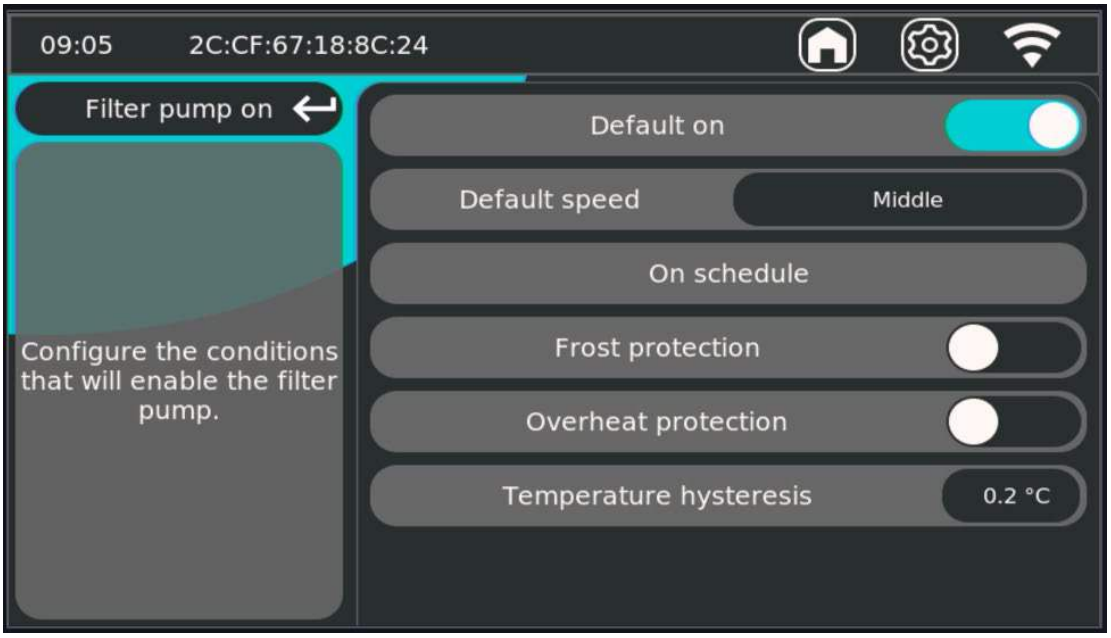


### Default on

When **Default on** is enabled, the filter pump runs **continuously (24/7)**.

### Default speed

Sets the **pump speed** used when the pump runs via **Default on** (e.g., Low).

### On schedule (see next section)

Opens the menu with the **weekly schedule (Schedule)**. This allows you to have the pump run automatically on set days and times, at a selected pump speed. This feature is explained in detail in the following section.

### Frost protection (expert)

Enables **frost protection** . When the measured temperature drops **below the set frost setpoint** , the pump can automatically turn on to help prevent freezing.

### Frost setpoint (Only if frost protection is enabled) (expert)

The temperature limit (°C) below which frost protection becomes active (e.g., 3.0 °C).

### Overheat protection (expert)

Enables **overheat protection** . When the measured temperature **exceeds the set Hot setpoint** , the pump can automatically turn on for additional circulation.

### Hot setpoint (Only if overheat protection is enabled) (expert)

The temperature limit (°C) above which **Overheat protection** becomes active (e.g., 40.0 °C).

**Tip:** Frost and overheat functions only work reliably when the temperature sensor is correctly positioned (outdoors, out of direct sunlight, and preferably in the shade).

## ❶0¡8¡9.(continued).Filter.pump.- .Schedule.(weekly.schedule)

By going to 'on-settings' in the filter menu and then proceeding to 'on schedule', the automatic schedules can be set.

To have the pump run at the desired time, at least one of the three filter schedules must be set. A schedule is always set for 24 hours; days are selected individually. Filter schedule 3 is already set by default and can be enabled immediately by tapping the slider. To adjust the settings, you can tap on the line itself.

Different schedules may overlap, and that is not a problem. The priority of the filter schedules is as follows:

1: Filter Schedule 1 (highest priority)

2: Filter Schedule 2

3: Filter schedule 3 (lowest priority; set the main filter period here)

**<u>The set speed has no effect on the priority.</u>**

Example 1

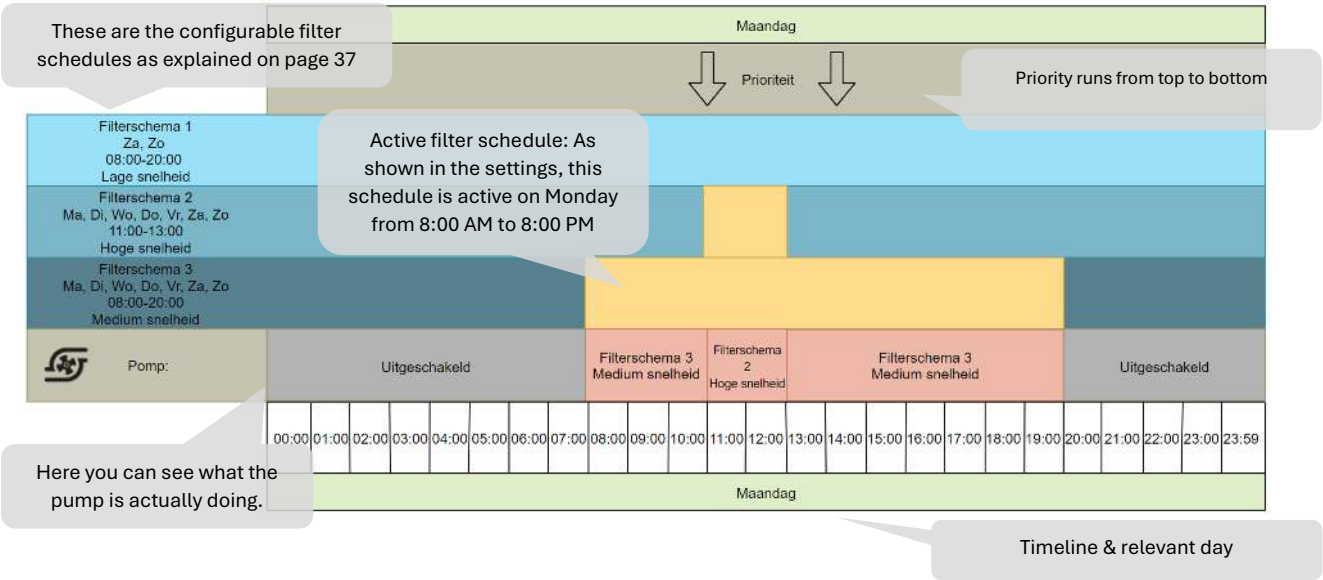


Notes:

- Filter schedule 1 is set in this example, but because it is Monday and this schedule is selected for Saturday and Sunday, filter schedule 1 has no effect on the pump on a Monday.
- Filter schedule 2 is set from 11:00 AM to 1:00 PM; because the priority runs from top to bottom (or from 1 to 3), the pump will run at high speed from 11:00 AM to 1:00 PM. That is because it has been selected for filter schedule 2.
- Filter schedule 3 is set from 8:00 AM to 8:00 PM. Since no other filter schedules with higher priority are set from 8:00 AM to 10:00 AM, the pump will run at medium speed, as it is set for filter schedule 3. From 11:00 a.m. to 1:00 p.m., filter schedule 3 will no longer be in effect; filter schedule 2 has a higher priority. At 2:00 PM, the pump will resume following filter schedule 3 because filter schedule 2 has ended.

Example 2

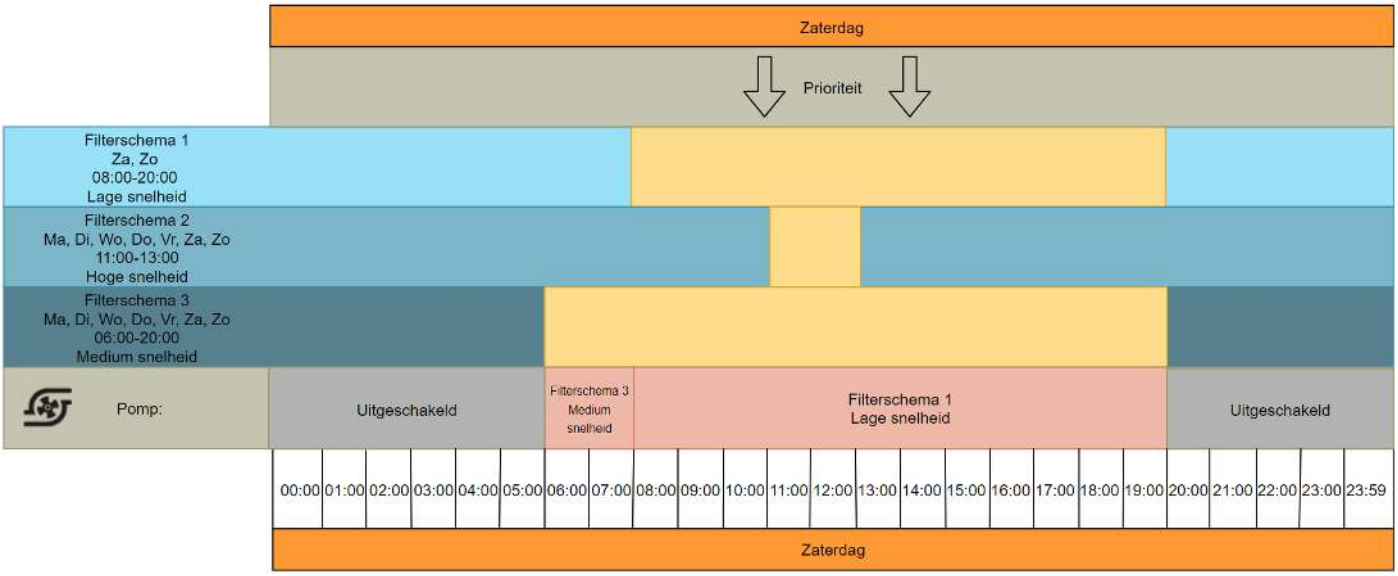


Notes:

- It is important to note that filter schedule 2 is set but never activates. This is because filter schedule 1 has a higher priority than filter schedule 2. **Priority runs from top to bottom** (or from 1 to 3).
- Filter schedule 3 is only active for two hours. Filter schedule 1 is set starting at 8:00 a.m. Filter schedule 1 has a higher priority than filter schedule 3. **Priority runs from top to bottom.**

**Additional note/helpful tip:** A filter schedule may have an end time that is earlier than the start time. It looks like this:

Filter schedule 1:
Sunday
12:00-11:00
Low speed

This schedule will start on Sunday at 12:00 and end on Monday at 12:00. This way, a filter schedule can also continue past 11:59 PM.

Another example of this is:

Filter schedule 1:
Sunday
10:00 PM–7:00 AM
Low speed

Filter schedule 2:
Sunday
7:00-22:00
High speed

## 5.5 Backwash

In the **Backwash settings** , you manage all settings related to backwashing the filter (automatic and manual), including timing, conditions, and safety features. This can be found in the filter menu.

The following options are available in the **Backwash** menu:

- Manual start

Manually start a backwash cycle based on the set backwash parameters.

- Manual stop

Manually stop an active backwash cycle.

- Backwash settings

Here you can configure when the backwash starts and how the cycle is performed.

- Backwash configurations

In **Backwash configurations** , you can configure which parts of the backwash logic are active.

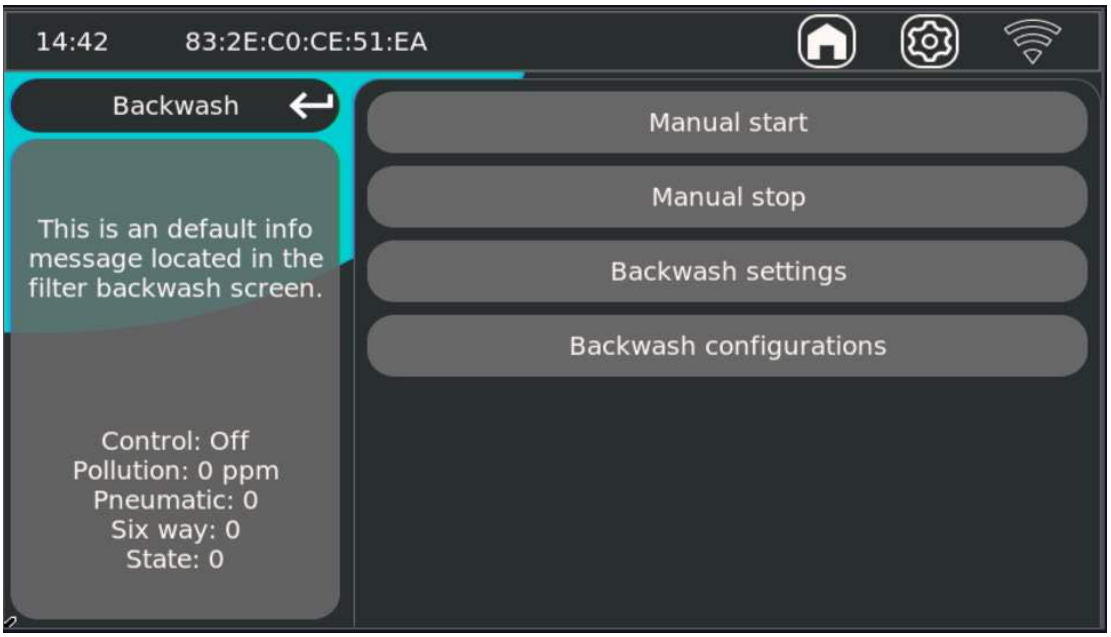


## ❶❶7.Safety.and.Responsibilities.(Backwash)

**CAUTION – Backwash directly affects the hydraulic system**
Backwash controls the pump, valves, and drain. An incorrect setting can lead to insufficient flushing, incorrect valve positions, additional water loss, or malfunctions.

**CAUTION – Use manual start/stop only when necessary**
Use **Manual start** and **Manual stop** only when necessary (e.g., testing, service, or malfunction). Interrupting a cycle incorrectly can result in incomplete cleaning of the filter.

**CAUTION – Do not disable safety features without good reason**
Options such as **Disable on flow sensor**, **Disable on pump control**, **Disable on pressure sensor** and **Disable on pump Norsup control** protect against unsafe or invalid backwash conditions.

**NOTE – Timing settings determine the operation of the entire cycle**
Incorrect values for, among others, **Backwash duration**, **Backwash rinse**, **Backwash sewer**, **Backwash timeout** and **Backwash pneumatic** can make the cycle unreliable.

**NOTE – These features are for support, not absolute fail-safe**
Backwash and safety features mitigate risks, but do not prevent all errors or failures resulting from improper installation, defective hardware, or incorrect configuration.

## ❶❶8.Backwash.settings.(expert)

In **Backwash settings** , you can configure when backwash starts automatically, how long each phase lasts, and under what conditions backwash should be blocked.

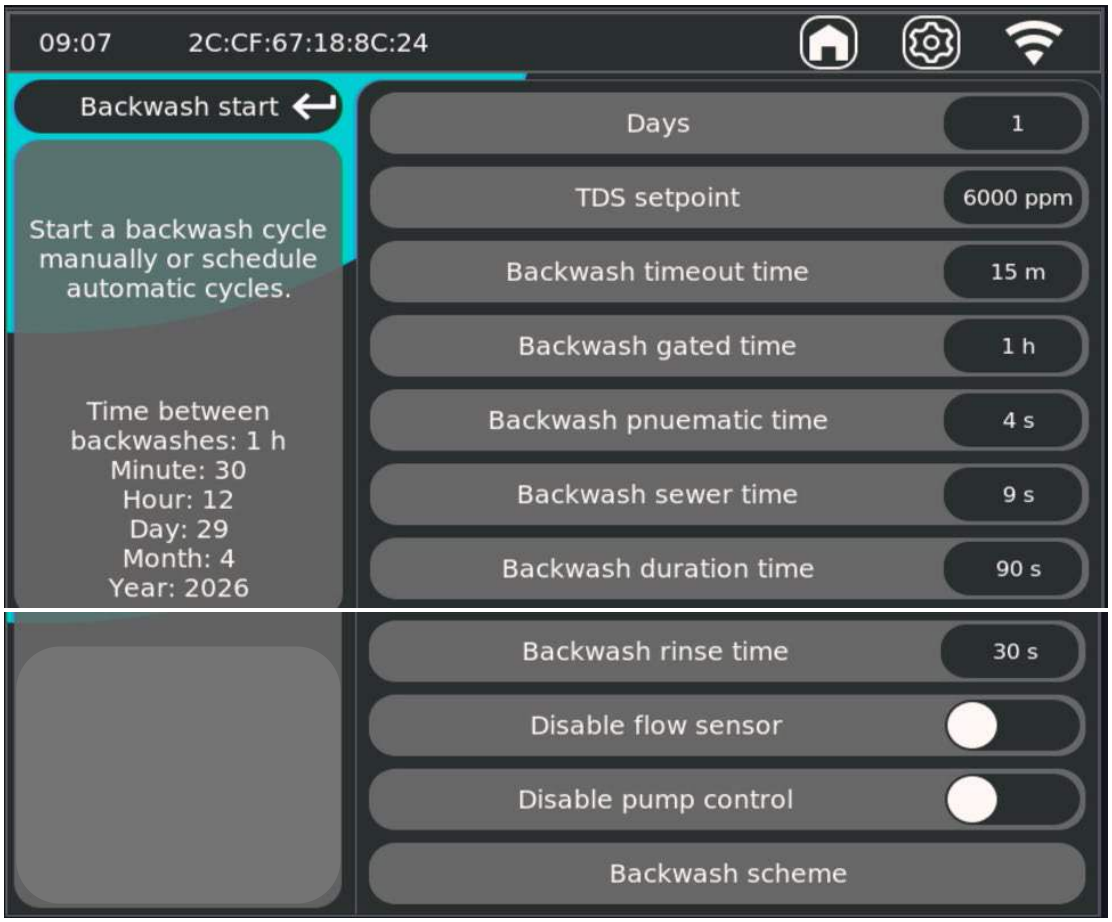


### Days

Number of days between automatic backwash cycles. For example, if you enter 7 days here, depending on the schedule entered at the bottom, the next flush will take place in 7 days. However, if the schedule specifies that backwash is only allowed on Fridays, the timer will calculate the next suitable time. As a result, the next backwash may occur a week later than expected.

- : Today is Saturday, and I enter that the next backwash should take place in 7 days, but in the schedule at the bottom of the list I have specified that backwashing may occur on Friday at 12:30 PM. The timer will expire on Saturday, but the next suitable time is the following Friday. So the system will wait much longer than 7 days in total.

The next suitable time to backwash is always shown on the left side of the screen

### TDS setpoint

Threshold value (ppm) for TDS-controlled backwash (if TDS is active in the configuration). **Not suitable for salt baths.** Intended only to prevent the level of dissolved substances from exceeding the set amount in ppm. Always check the TDS value (in ppm) of clean water and multiply it by a factor of 2 to prevent an overly aggressive backwash setting.

### Backwash timeout time (expert)

Maximum allowed duration of a backwash cycle before the timeout protection intervenes. This is intended to prevent the system from backwashing indefinitely if the valve malfunctions. The timeout should not be too short to prevent unnecessary intervention. **(Backwash time + rinse time + 11 min)**

### Backwash gated time (expert)

Minimum wait time between two backwash cycles.

### Backwash pneumatic time

Control time for the pneumatic backwash circuit (if present—pneumatic).

### Backwash sewer time (expert)

The delay required for opening the sewer valve. This should not be too short to prevent the pump from starting while the valve is still closed.

### Backwash duration time

Duration of the main backwash phase. (if present—pneumatic)

### Backwash rinse time

Duration of the rinse phase.

Disable on flow sensor (expert)
Prevents backwash when the flow sensor condition is invalid.

Disable on pump control (expert)
Prevents backwash when the pump control does not allow backwash.

Backwash scheme (expert)
Here you can specify the day and time when a backwash operation may be performed. If you set this very strictly, the next backwash may take longer than the number of days set. See example!

**NOTE**
After making changes to backwash times or blocking conditions, always perform one manual test and verify that the cycle runs correctly (start → sewer/backwash → rinse → stop).

## ❶❶9.Backwash.configurations.(expert)

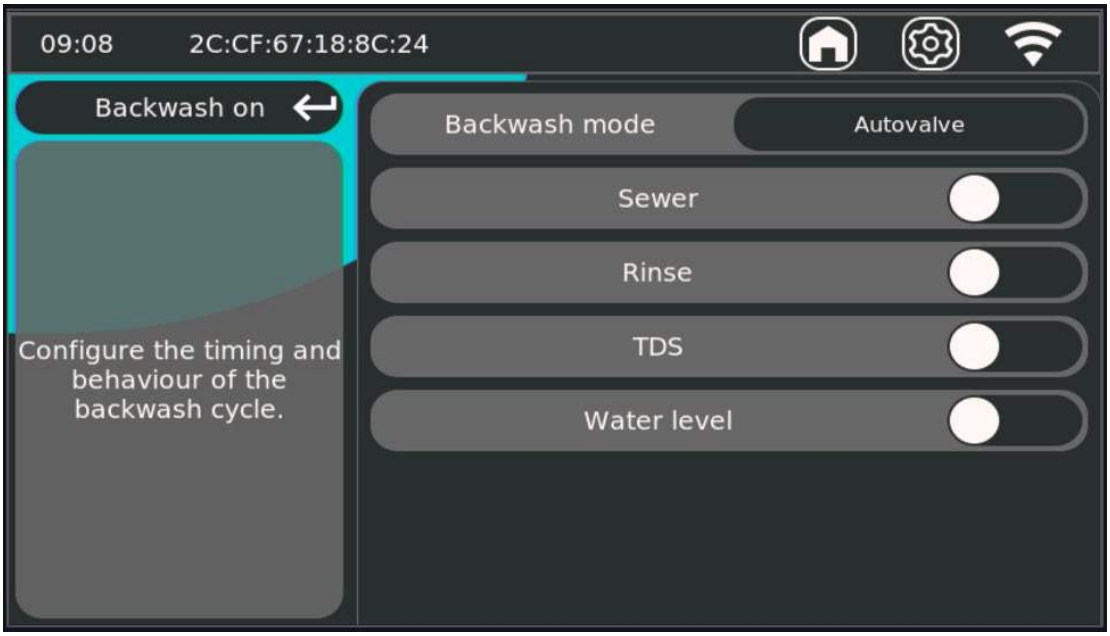


In **Backwash configurations** , you set which hardware is present and which backwash logic the system should use.

### Backwash.mode.(expert)

Determines the type of valve control for backwash: **Autovalve** or **pneumatic valve**.

Always select the valve used in the installation; otherwise, the backwash procedure will not function correctly.

### Sewer.(expert)

Indicates whether an **electric sewer valve** is present.
Enabled = sewer step is actively used in the cycle.

### Rinse.(expert)

Indicates whether a **pneumatic rinse valve** is also present in a pneumatic configuration.
Disabled = the system **skips the rinse step**.

### TDS.(expert)

Indicates whether a **TDS sensor** is present and whether backwash may be initiated based on **contamination level** (TDS threshold).

### Water.level.(expert)

Indicates whether backwash may be initiated based on an **excessively high water level**.

**Note**
This configuration must match the physical installation. An incorrect selection (e.g., rinse on without a valve, or sewer off with a sewer valve) causes incorrect cycle steps or malfunctions.

## 5.6 Temperature Management

In the **Temperature** menu, you manage the system's heating control.
Here you set **how** the system is controlled, at **what target temperature**, and under what conditions the heating may turn **on** and **off** .

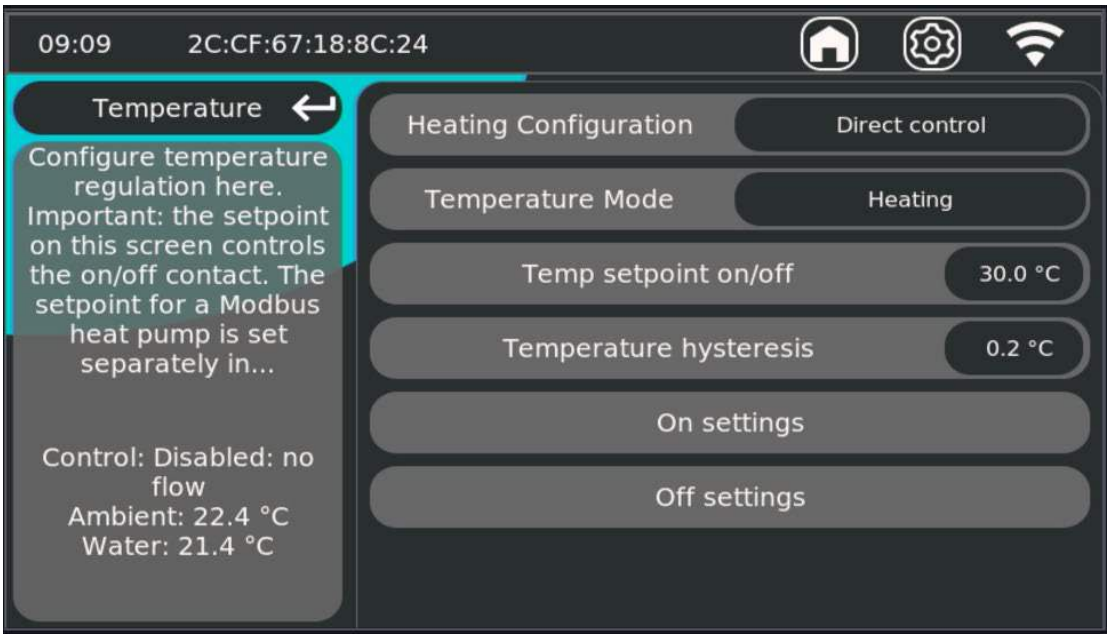


The following items, among others, are visible in this menu:

### Heating.configuration.(expert)

Selects which temperature control or source is used (depending on configuration).

### Temperature.mode.(expert)

Determines what the control system manages, for example, heating or cooling. (Heating & cooling and cooling require an auxiliary relay to enable the cooling function. **5.2.6 Output (expert)**
**NOTE:** In cooling mode, the heating contact is **NOT** used for the cooling function. This IS **the case** with dosing for pH+ only (the pH- contact will then activate when the pH is too low).

### Temperature.setpoint

The desired water temperature that the system regulates to.

### On.settings.(expert)

Settings that determine when temperature control may activate, including:

- **Default on** (default active),
- **Forced on** (forced on),
- **Weekly schedule** (weekly schedule with days and time window),
- **Enable time / Disable time** (minimum on/off times to prevent cycling). This applies only to time mode and PID Auto

### Off.settings.(expert)

Settings that determine **when temperature control should be disabled or blocked** (e.g., due to external conditions or safety measures, depending on configuration).

### Modbus.settings.(if.available).(expert)

Settings for external control/readout via Modbus (register-controlled integration with BMS/PLC/external system).

### Temperature.hysteresis.(in.Hysteresis.mode).(expert)

The bandwidth around the setpoint within which switching does not occur immediately.
Smaller hysteresis = faster response but more switching events.
Larger hysteresis = smoother switching but a larger temperature deviation is allowed.

## ❶❷7.Zero_E.(expert)

Zero-E can use a connection to the home system's smart meter to determine whether electricity is being generated or consumed. Based on this data, the water temperature can be increased to a second, higher setpoint than the» normal‹ desired water temperature.

The »normal‹ desired water temperature can be considered the lower limit in this context.

### Connecting.Zero_E¿

Ensure that the Norsup ONE V3 is connected to the internet and that the Zero-E dongle is inserted into the P1 port of the meter box and connected to the same network. See the instructions included with the Zero-E dongle for details.

The Norsup ONE V3 and the dongle will automatically detect and connect to each other.

### Setting.up.Zero_E¿(expert)

Check the heat pump's rated power consumption. For most heat pumps, this is between 1000 and 2000 watts.

***This is not the power rating of the heat pump listed on the type plate. A DURA 13i , for example, is a 13 kW heat pump, but the nominal power consumption is approximately 1500 watts (1.5 kW)**

1. Set the »setpoint enable‹ to the heat pump's nominal power consumption. In this case, that is -1500 watts.

a. The »setpoint enable‹ may also be lower, but then a small amount of extra power will be consumed when the heating is turned on. This is because the heat pump consumes 1500 watts, but in most cases this is still more cost-effective.

2. Set the »setpoint disable‹ to the heat pump's rated power consumption. In this case, that is +1500 watts.

a. When no more electricity is generated , the power consumption at the meter box will exceed 1500 watts because the heat pump is still running. The heat pump will be turned off. **(See , also point 4)**

b. This can also happen when another power-consuming device, such as a car charger or a washer/dryer, turns on.

3. Set the»Zero_E.setpoint.temperature‹ to 5 degrees higher than the»normal desired.water.temperature‹ for maximum effect.

4. Set the interval to 5 minutes to compensate for minor fluctuations in power generation. The heating will be on for at least 5 minutes. This helps extend the heat pump's lifespan.

Things.to.keep.in.mind

- The system will never allow the water temperature to fall below the»normal desired.water.temperature‹
- The system will heat towardthe.»Zero_E.setpoint temperature‹ if the amount of generated power allows it, and will stop doing so if power consumption exceeds the »Zero_E.setpoint disable‹
- The system will switch off the heat pump when the»Zero_E.setpoint temperature‹ is reached, even if sufficient power is still being generated.

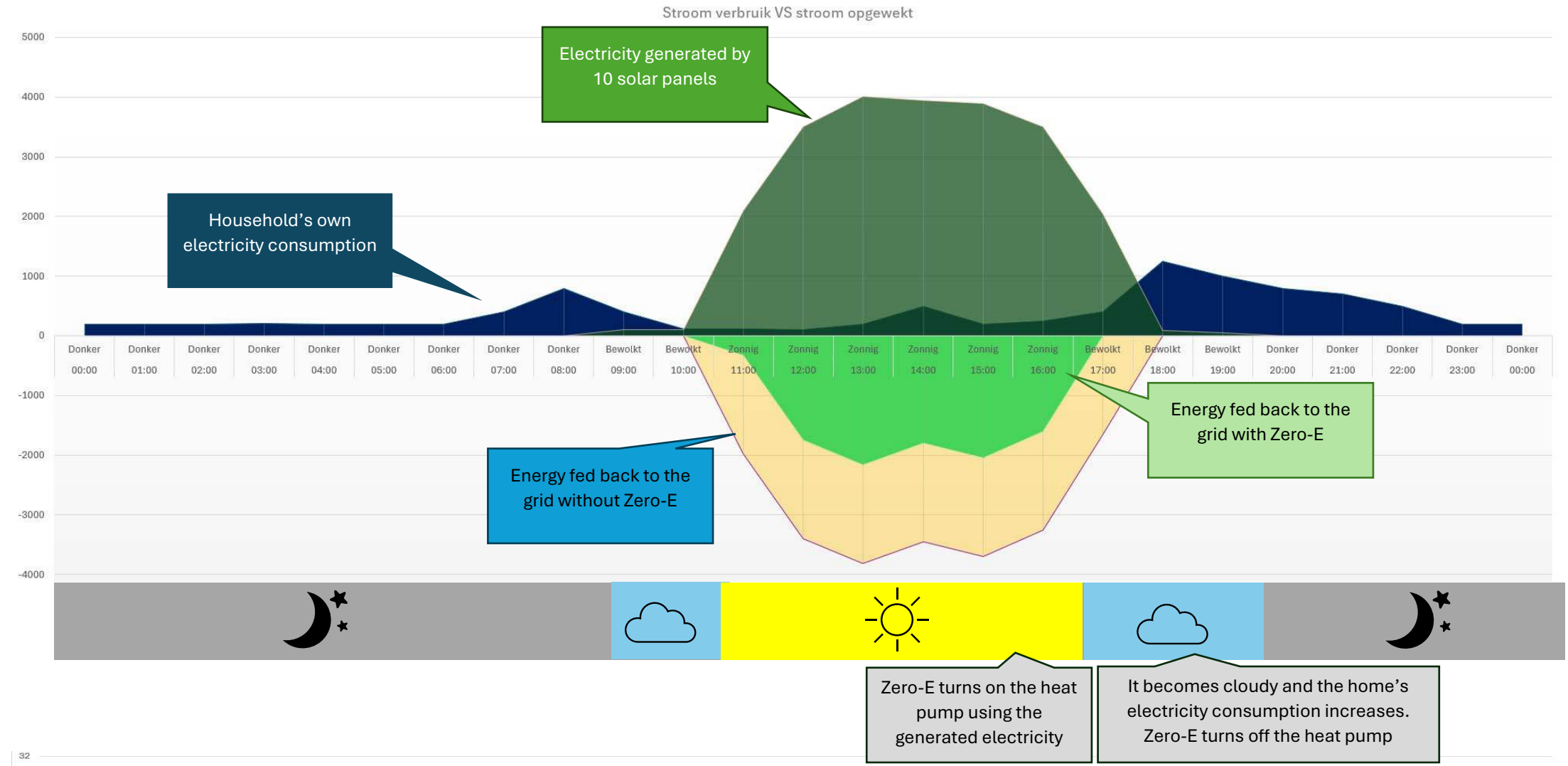


Zero-E turns on the heat pump using the generated electricity

It becomes cloudy and the home's electricity consumption increases. Zero-E turns off the heat pump

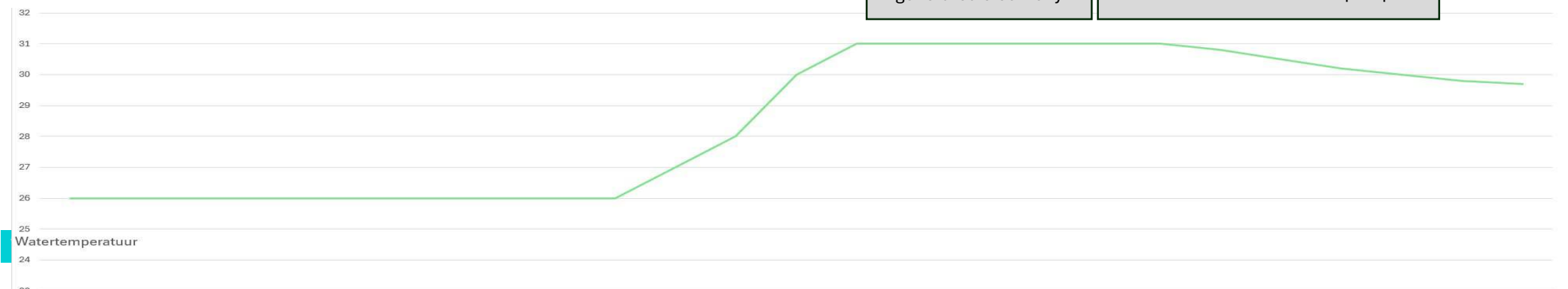

## 5.7 Lighting

In the **Lighting** menu, you can manage the control of the pool lighting, including type selection, automatic switching via a weekly schedule, and (for RGB) color control.

The Norsup ONE V3 supports **12 VAC** pool lighting via a suitable transformer (in accordance with system configuration).
Lighting can be switched via:

- manual control in the menu;
- weekly schedule (Weekly scheme);
- external input (if configured).

Depending on the selected lighting type, RGB can operate in two ways:

- **pulse control** on the power line (color change via a short interruption);
- **direct color selection** (type-dependent).

### ❶❸7.Safety.and.Responsibilities.(Lighting)

**CAUTION – Installation quality determines the performance of RGB lighting**
Correct installation is essential for RGB lights. In practice, problems with color control often arise due to cabling, connectors, interference, or insufficient separation of cable runs.

**CAUTION – Always follow the lamp manufacturer's instructions**
Use only fixtures, power supplies, transformers, cable types, connection methods, and insulation materials that comply with the manufacturer's installation instructions. Deviations can lead to malfunctions, unpredictable behavior, and voiding of the warranty.

**CAUTION – Cable length and cable cross-section are critical for RGB**
Adhere to the maximum cable length and minimum cable cross-section as specified by the manufacturer.
Cables that are too long or wires that are too thin can cause voltage drops, poor signal quality, and incorrect color changes.

**NOTE – RGB pulse control is timing-sensitive**
Incorrect values for **Next pulse time** and **Reset pulse time** can result in missed commands, incorrect color steps, or the lamp failing to respond.

## 1.3.8.Lighting.Menu.Overview

**Settings**

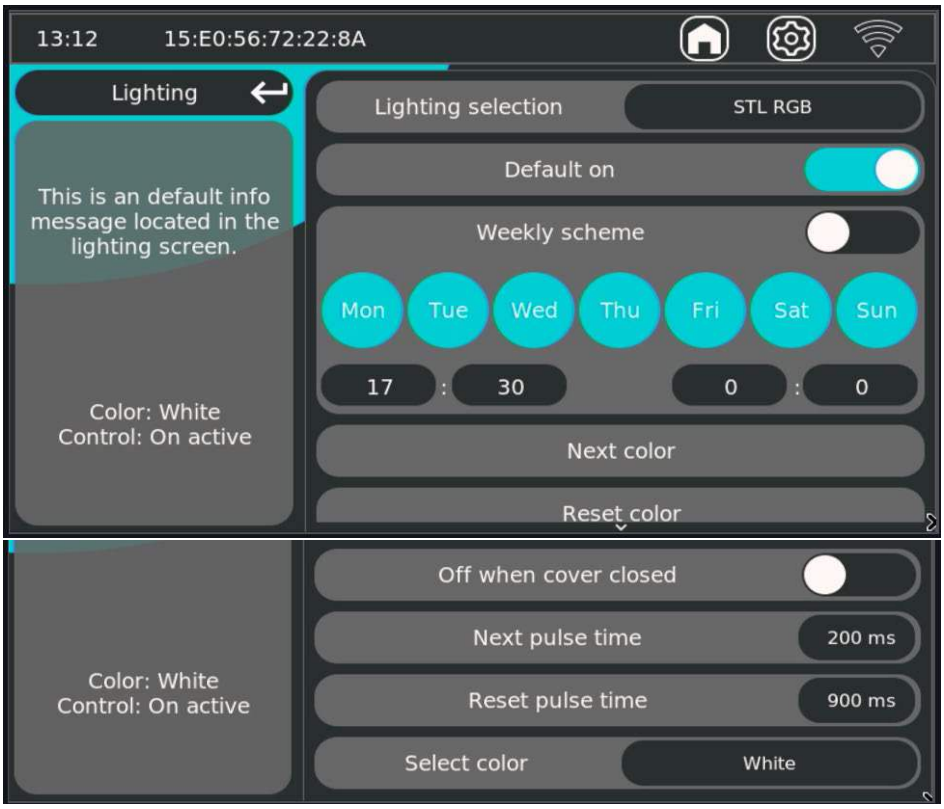


### Lighting.selection.(expert)

Selects the lighting type/driver profile (e.g., STL.RGB).
This selection determines which functions are available (on/off, pulse control, color selection).

- Standard (on/off/white)
- Rotating RGB (universal pulsing for next color)
- STL-RGB (provides pre-programmed color schemes for Astral Lumiplus Mini v2 and Ignia RGB)

### Default.on

When enabled, lighting is active by default (unless blocked by other conditions).

### Weekly.scheme

Enables/disables weekly scheduling for lighting.

### Weekdays.>.time.window.(Mon-Sun?start-stop)

Determines on which days and during which time window lighting may be automatically active.

### Next.color.(only.for.STL_RGB.™.Rotating.RGB)

Advances one color step to the next color (for lights with pulse-based color change).

### Reset.color.(only.for.STL_RGB.™.Rotating.RGB)

Resets the color sequence to the start/reference color (type-dependent).

### Off.when.cover.closed

Automatically turns off the lighting when the cover is closed (based on the cover sensor).

### Next.pulse.time.(only.for.STL_RGB.™.Rotating.RGB)

Pulse duration for a “next color” command (short interruption).

### Reset.pulse.time.(only.for.STL_RGB.™.Rotating.RGB)

Pulse duration for a “reset color” command (usually a longer pause than the next pulse).

### Select.color.(only.for.STL_RGB)

Direct color selection (if supported by the selected lighting type).

## 5.8 Water Level

In the **Water level** menu, you manage the complete control for automatic refilling/shut-off based on level measurement.
This menu determines **which sensor is used**, **which control method is active**, **when the control is blocked** , and **the timing of the control switches**.

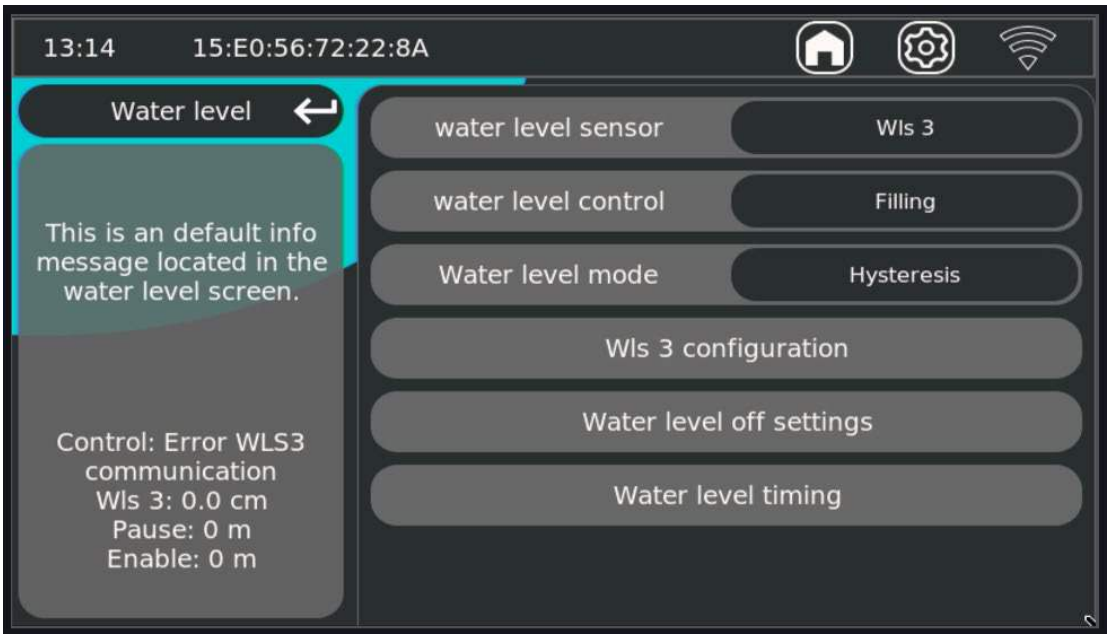


### ❶❹7.Safety.and.Responsibilities.(Water.Level)

**CAUTION – Water level is a functional control, not a primary overflow protection**
The water level control helps manage the level automatically, but does not replace mandatory structural or hydraulic safety measures (such as overflow, drain protection, or backflow prevention).

**CAUTION – Incorrect blocking settings can cause unwanted filling or, conversely, prevent filling**
The options in **Water Level Off Settings** can intentionally disable the control. Incorrect combinations can lead to:

- filling stopping too early;
- no filling at all;
- filling at the wrong times.

**NOTE – Sensor reliability is a prerequisite**
In case of communication or measurement errors (as shown in status: Error.WLS9.communication), the control system cannot function correctly. Check the cabling, sensor configuration, power supply, and sources of interference.

**NOTE – Connections to flow/pump/deck directly affect behavior**
When flow, pump status, or deck position blocks are enabled, water level control will only work if those conditions are met.

### ❶❹8.Water.level.(main.page)

### water.level.sensor.(level.measurement).(expert)

Determines the sensor type of the system. This depends on the system configuration. For a standard float, select "Float," and if a Water Level Sensor 3 is installed, select "WLS 3.".

- Float
- WLS 3 **(always select Modbus port 1 for WLS 3 configuration)**

## water.level.control.(expert)

Determines what the control system controls, for example, filling or draining. (Filling & draining requires an auxiliary relay to perform the drain function. **5.2.6 Output (expert)**

- Filling
- Draining
- Filling and draining

**NOTE:** In draining mode, the solenoid contact **NOT** used for the drain function. This IS **the case** for dosing for pH+ only (the pH- contact will then activate when the pH is too low).

## Wls.9.configuration.(expert)

Opens sensor-specific settings for WLS3, currently only port selection. **(Always select port 1)**

WLS calibration:
To calibrate the WLS, it must be installed according to the included instructions. Once the electrical connection is complete and port 1 is selected, the measured depth is displayed on the left side of the screen.

In the “WLS 3 Configuration” settings, you can select the height for the various water levels.
Always ensure there is sufficient margin between the water levels. Only when the measured value exceeds the set value will the displayed water level change.

## Water.level.off.settings.(expert)

In this screen, you define when the water level control must **not** switch.
These are safety and operational blocks.

**Level blocks**

- **Disable too high**
  Blocks control at too high a level.
- **Disable off high**
  Blocks control at the high “off” limit.
- **Disable off low**
  Blocks control at the low “off” limit.
- **Disable too low**
  Blocks control at too low a level.

**Flow-related blocks**

- **Disable with flow sensor**
  Enables blocking logic based on the flow sensor.
- **Disable no flow sensor**
  Blocks control when flow condition meets set logic.

**Deck-related blockages**

- **Disable on deck closed**
  Blocks control when the deck is closed.
- **Disable on deck open**
  Blocks control when the deck is open.

**Pump/pressure-related blocks**

- **Disable on pump control**
  Disables control based on pump control/status.

**Practical:**
Use only blocks that are functionally necessary in your hydraulic setup. Too many active blocks at once often results in “why isn’t it filling?” behavior.

## 5.9 Cover (with Covco/cover control on board)

When a **Covco module** is installed in the Norsup ONE V3, the Norsup ONE V3 takes over the cover's motor control entirely. Unlike a third-party controller (see §5.10), the Norsup ONE V3 communicates directly with the tubular motor and the encoder in this configuration. On the Internal. Cover screen, you will therefore see not only open/close buttons, but also the live status of the motor and encoder. For the electrical connection and motor configuration, refer to §4.8.3 Tubular Motor Control.

### ❶❺7.Status.Panel.(left.side.of.the.screen)

The status panel continuously displays the current status of the cover and the Covco module. This allows you to immediately see whether the motor, encoder, and power supply are working correctly during commissioning and maintenance.

1. **Current state** – The current logical state of the cover: Open, Closed or Unknown. Unknown appears after an encoder reset or after changing the encoder calibration and remains until a Program.closed or Program.open is executed again (see 5.9.3).
2. **Input V** – The measured input voltage on the Covco module (nominal 24 VDC).
3. **Current location** – The current encoder position in pulses. This value increases during opening and decreases during closing. With a calibrated deck, "0" equals fully closed and the programmed open position equals fully open.
4. **Encoder error** – Tracks deviations between expected and measured encoder movement. A value ≠ 0 indicates slippage, cable issues, or an incorrectly configured encoder. **Encoder error 1** means that no pulses are being received; **Encoder error -1** means that the order of the A and B encoders is reversed (see 5.9.6 Calibration Procedure).
5. **Cover Control Relay motor** – The current drive percentage of the Covco relay (PWM/speed).
6. **Motor (W) / Motor (A)** – The current motor power consumption and motor current. Use these values to assess the motor load during operation, startup, and end-of-travel.
7. **Encoder V** – The supply voltage provided to the encoder. This must match the value selected in Encoder.selection (5/12/24 V).

### ❶❺8.Motor.control.- .Automatic

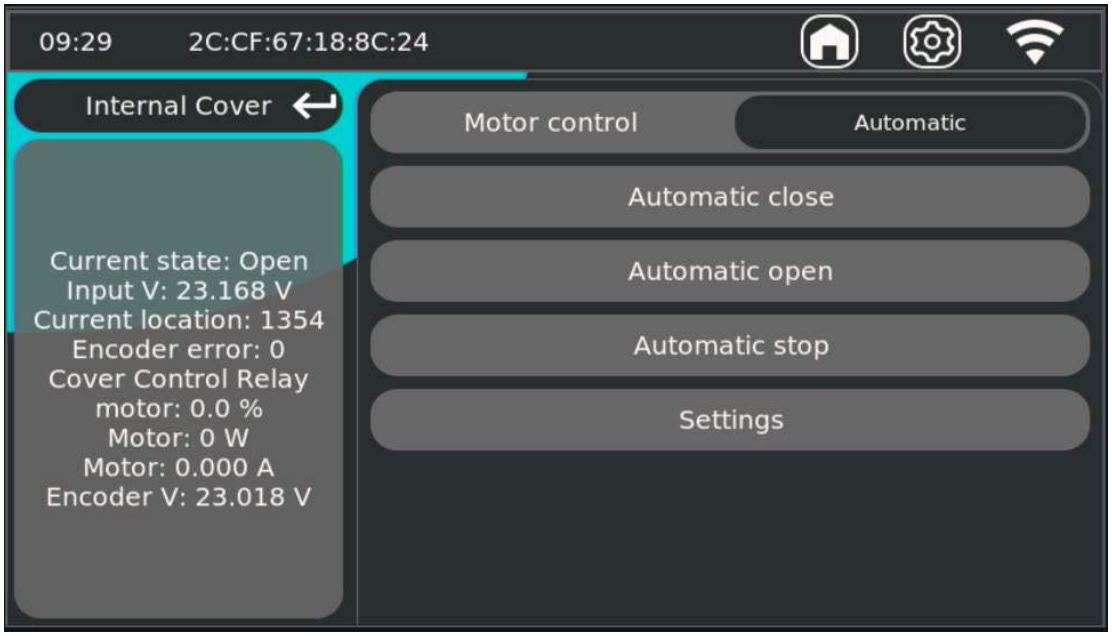


Under Motor.control , select the operating mode in the top right corner. In **Automatic mode** , the cover is moved fully automatically to the programmed end positions, with speed ramp, slow-speed approach, and current detection according to the Covco settings. This is the mode in which the cover is used in daily practice.

8. **Automatic close** – Closes the cover to the programmed closing position.
9. **Automatic open** – Opens the cover to the programmed open position.
10. **Automatic stop** – Immediately stops the current movement. The position is maintained.
11. **Settings** – Opens the settings menu (see 5.9.5).

### ❶❺❾.Motor.control.- .Programming

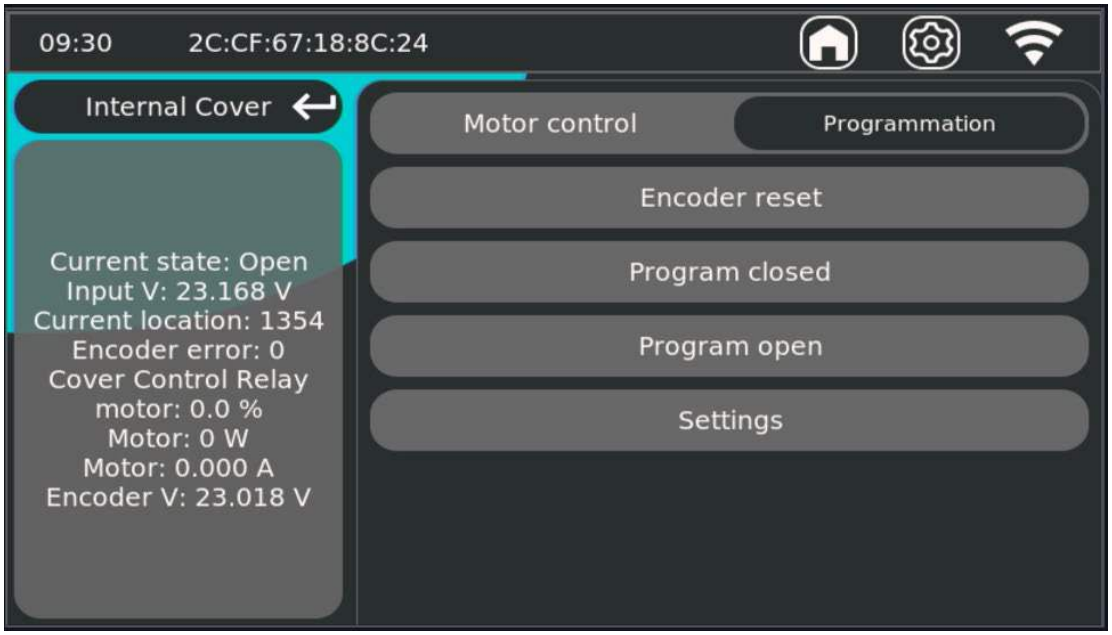


In **Programming** , the end positions (fully open and fully closed) of the deck are set. This step is required after installation, after replacing the motor or encoder, and after an encoder reset.

12. **Encoder reset** – Set Current.location back to 0 and Current.state to Unknown. Use this as the starting point for calibration or if the reference is lost.
13. **Program closed** – Move the deck (if necessary via Manual) to the desired closed position and confirm with this button. The current encoder position is saved as the closed position.
14. **Program open** – Same for the open position.
15. **Settings** – Opens the settings menu (see 5.9.5).

**Important:** Always program both Program.closed and Program.open. As long as one of the two positions is missing, Current.state remains set to Unknown and Automatic does not function correctly.

### ❶❺❿.Motor.control.- .Manual

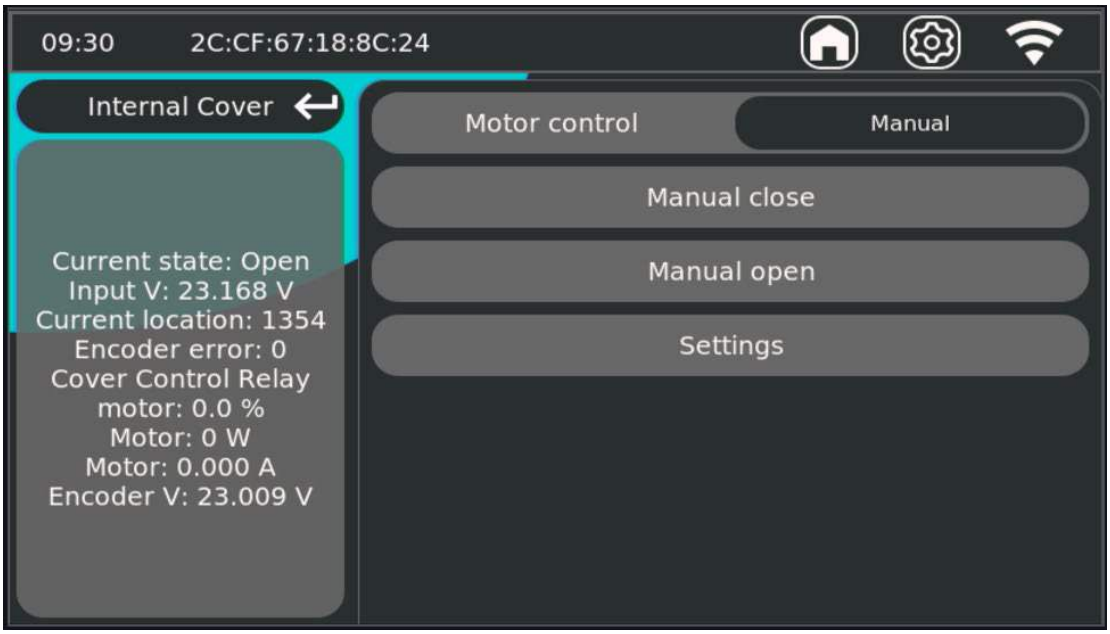


In **Manual** mode, the motor is controlled directly as long as the button remains pressed. This mode is intended for commissioning, mechanical checks, and moving the deck to the desired position for programming the limit positions. **Safety devices at end positions are not active in this mode** – the installer is responsible for monitoring the deck during this operation.

16. **Manual close** – The motor closes as long as the button is pressed. Release = stop.
17. **Manual open** – The motor opens as long as the button is pressed. Release = stop.
18. **Settings** – Opens the settings menu (see 5.9.5).

After a manual movement, Current.state may show as Unknown ; this is normal and will disappear as soon as the deck reaches a programmed end position again.

### ❶❺❶Settings.(advanced.Covco.settings)

**NOTE –** The values in this menu directly affect the motor control and overcurrent protection. Only adjust these settings if the type of motor, encoder, and power supply is known. Incorrect values can lead to motor overheating, damage to the mechanism, or failure to detect obstructions.

**Control and Safety Options**

19. **Key Deck** – Upon power-up, the deck key contact must be made before the deck can be operated. If the key contact is not made, the control buttons remain locked.
20. **Lock** – Automatically locks the deck when the water level is too high or too low, preventing the cover from being operated in a hydraulically unsafe situation.
21. **Brake control** – Engages or disengages the motor's brake control and is enabled by default.
22. **Chopper resistor** – Turns the chopper control on or off. The chopper absorbs the braking power (driving power) of the motor during braking.
23. **AB encoder** – Off by default. Intended to enforce a fixed sequence of A and B pulses for added safety (direction of rotation check). Only enable this when the motor's direction of rotation has been determined and an AB encoder is actually being used. It may be necessary to reverse the A and B connections in the electrical wiring — so check this.
24. **Encoder selection** – Default 12 VDC, because almost all pulse sensors operate at this voltage. Always check the specifications of the tubular motor and adjust to 5 VDC or 24 VDC if necessary.

**Speed and motion parameters**

25. **Cover Control Relay slow speed** – Default 70%. Indicates the slow rotation mode: the speed at which the deck approaches the end position.
26. **Cover Control Relay full speed** – Default and up to 99%. Full movement speed between open and closed.
27. **Cover Control Relay step speed** – Specifies the steps the motor controller takes during the speed ramp-up and ramp-down. The smaller the step, the longer the ramp; the larger the step, the shorter the ramp.
28. **Brake timeout** – Delay between the motor stopping and the brake engaging. Never change this value arbitrarily — adjust it only if absolutely necessary and with expert knowledge.
29. **Encoder timeout** – The time the system waits without receiving incoming pulses before an encoder error is reported.
30. **Ramp timeout** – Time between two steps during ramp-up and ramp-down. The higher the value, the longer the ramp time.
31. **Manual timeout** – Maximum time that a Manual command remains active after the button is released. Factory setting; adjust only by authorized personnel.
32. **Hysteresis location** – Never adjust this value arbitrarily and never set it lower than 200, unless requested by a support representative. Indicates how far before the end of a deck movement (in encoder pulses) the ramp-down begins.

**Power supply and current specifications (factory settings)**

**24V supply type, Encoder supply type, Motor supply type, and Current motor type** – These are factory settings for monitoring the 24 V power supply, the encoder power supply, the motor power supply, and the expected motor current, respectively. **Do not adjust these settings.** Changes to these settings may only be made in consultation with Norsup support.

**Tubular motor cable length:** The standard cable length for a tubular motor is **30 meters**. Extensions may only be made in consultation with the motor supplier and only with the guarantee that the voltage across the encoder does not fall below the nominal value. See also §4.8.3.

## ❶❺❷Calibration.procedure.(required.during.initial.commissioning)

**!! VERY IMPORTANT !! Follow this procedure step by step and in this order. Do not skip any steps, and visually inspect the deck and the status panel after each step. An incomplete or incorrectly performed calibration will result in incorrect end positions, failure of the overcurrent protection, and possible damage to the motor, deck, or mechanism. The installer is fully responsible for the operation of the cover: an adjustment that is too tight and/or insufficient guide mechanisms can cause the cover to jam. So check this carefully before and during calibration.**

**Step 1 – Check motor rotation direction**

Switch to **Manual** and carefully attempt to close the deck using Manual.Close. Check whether the motor **is rotating in**the correct direction. If the motor is rotating in the wrong direction, **reverse**the + and – terminals on the motor connection. Then test again with Manual.close and Manual.open before proceeding.

**Step 2 – Check the encoder**

Close the deck completely in **Manual mode** and check the status panel for an.Encoder.error. This should be set to **0** .

33. **Encoder error = 1** → no pulses are being received. Check the encoder wiring, encoder power supply (does this match the. Encoder.selection?), and the connection to the Covco module.
34. **Encoder error = -1** → The order of the A and B encoders is incorrect. Disable the AB.encoder via Settings **and/or** reverse the A and B connections on the motor. Then test again.

If an encoder error has occurred, switch to **Programmation**, perform an Encoder.reset , and verify that Encoder.error no longer displays a value.

**Step 3 – Program the closed position**

In **Manual** mode, close the deck completely. Then switch to **Programmation** and perform an Encoder.reset . Then press Program.Closed to save the current position as the closed position.

**Step 4 – Program the open position**

Switch back to **Manual** and fully open the deck. While the deck is moving, check whether the **pulses are increasing** under Current.location in the status panel. When the deck is fully open, switch to **Programmation** and press Program.open to save this position.

**Step 5 – Verify in Automatic**

Switch to **Automatic** and verify that Current.state displays the value **Open** . If so, the programming was successful.

**Step 6 – Final check: at least 5 cycles**

Let the deck **open and close fully** at least **5 times**in Automatic. Check for each cycle that: Current.state switches properly to Open or Closed (not Unknown), that Encoder.error remains at 0, that Motor.(A) is within the expected range, and that the cover does not get mechanically stuck anywhere.

**Installer's responsibility: The installer is FULLY responsible for the operation of the cover.** Over-tightening, insufficient guide mechanisms, incorrect mechanical assembly, or the absence of emergency provisions can cause the cover to jam, damage the motor or mechanism, or create an unsafe situation. Therefore, check this thoroughly before commissioning and repeat the check during every annual maintenance service. The Norsup ONE V3/Covco does not replace primary mechanical safety devices on the cover.

**Adjusting the programming:** After programming the cover, the open/closed position can still be adjusted.
Set the cover to the position that needs to be adjusted using the automatic control. Then switch to manual operation and adjust as desired. Then go to programming and reprogram (MAKE SURE TO SELECT THE CORRECT OPTION) the open or closed position. This is now the new open/closed position.
Afterward, check the full automatic operation.

## ❶❺❸Calibration.with.calibration.tool

To perform calibration at the cover, a calibration tool consisting of 2 switches can be used.

By default, the calibration tool is supplied with a green terminal block for the Norsup ONE V3 1. The Norsup ONE V3 uses a direct cable connection.

1. Disconnect the terminal block
2. Connect **brown (OPEN)** to the **+ input 'open'** on the Norsup ONE V3
3. Connect **blue (CLOSE)** to the **+ 'close' input** on the Norsup ONE V3
4. Connect the **yellow/green** wire to a **GND (-)** terminal to complete the circuit.

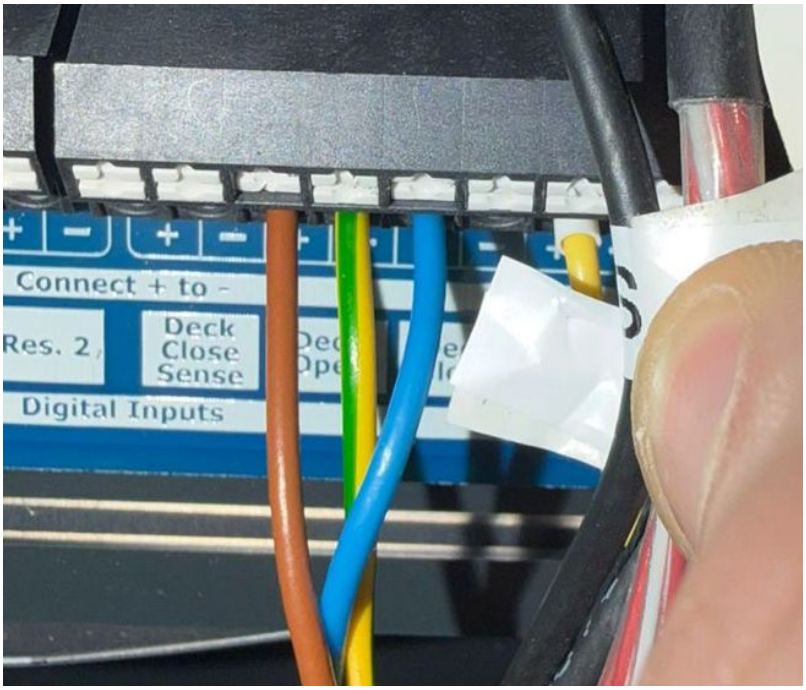


Instead of using the manual open/close buttons on the touchscreen, you can now use the calibration tool. Continue to follow the programming instructions carefully

## 5.10 Cover (only without Covco/CoverControl on board) (external control)

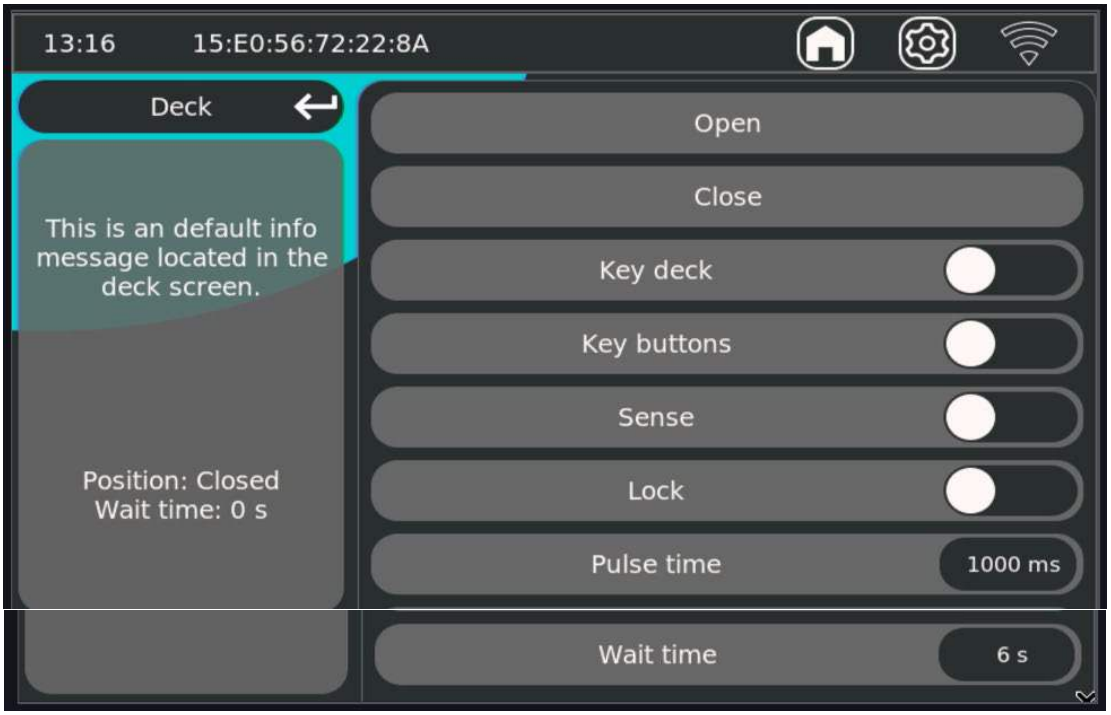


### Open

Initiate an open movement of the deck (if enabled by lock/keys/sense).

### Close

Starts a closing movement of the deck (if enabled by lock/keys/sense).

### Key.deck.(expert)

Enables/disables the deck key function (installation-dependent permission/release function). When this is off, the open/close buttons will always be available, even if the key contact is not made.

### Key.buttons.(expert)

Enables/disables control via external/deck buttons (installation-dependent).

### Sense.(expert)

Enables/disables feedback logic from sensors for position status or motion control. When this is off, the system will remember the state of the deck by retaining the last control input.

### Lock.(expert)

Locks deck control to prevent unwanted movement.

### Pulse.time.(expert)

Pulse duration of the control command to the deck controller (e.g., 1000 ms).

### Wait.time.(expert)

Specifies how long a deck movement takes

### ❶¶76¡7.Commissioning.and.testing

Always check the following after configuration:

35. **Open** and **Close** respond correctly.
36. **Position** Left corresponds to the actual deck position.
37. **Lock** blocks operation as intended.
38. **(important!) Key deck / Key buttons** enable only the desired control modes.

## 5.11 Auxiliary relays (Aux 1 through Aux 5)

In the **Auxiliary** menu, you can manage the naming and the conditions under which each auxiliary relay **switches on** or **off**.

Based on the screens shown, the structure per AUX channel is:

- **Auxiliary name**
- **Enable settings**
- **Disable settings**

On the left, you see the current status, for example:

- **Control: Off**

### ❶¶77¡7.Safety.and.Responsibilities.(Auxiliary.Relay)

**NOTE – Configuration directly determines switching points**
Enable/Disable conditions function as logical permissions and blocks. An incorrect combination can lead to unexpected on/off behavior.

**CAUTION – Disable conditions serve a safety function**
Condition blocks such as no.flow, pump.off, deck.closed and backwash are intended to prevent incorrect switching in unsafe or invalid conditions.

**NOTE – Electrical load remains the installer's responsibility**
Auxiliary relays remain control outputs. Permissible contact load and the use of contactors/intermediate relays must be implemented correctly in accordance with the electrical specifications.

### ❶¶77¡8.Auxiliary.Main.Screen

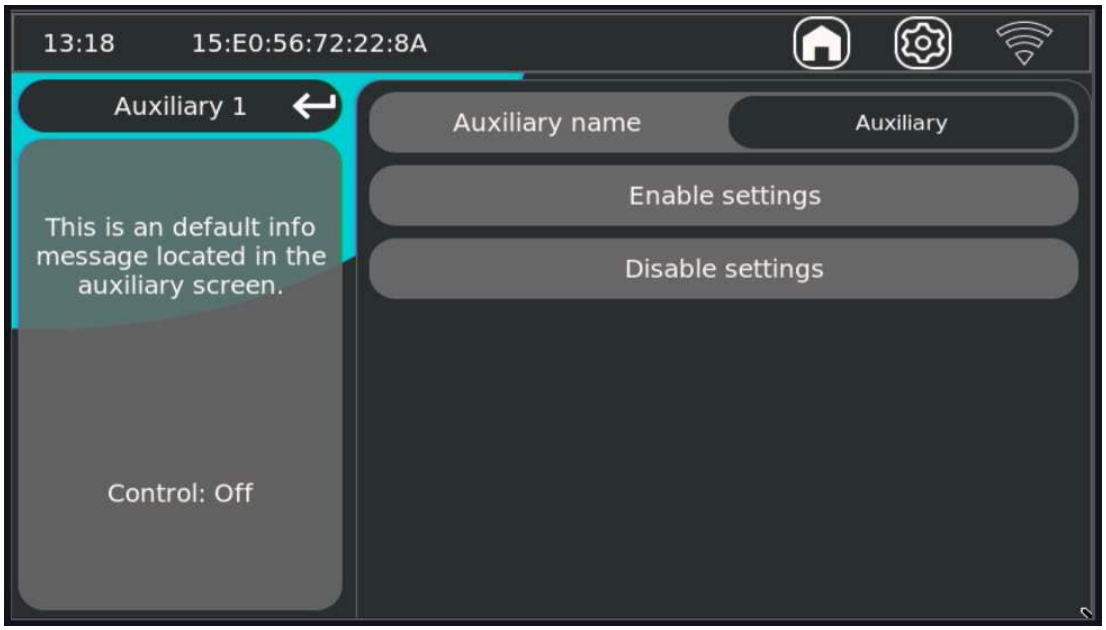


### Auxiliary.name

Here you give the auxiliary relay a recognizable name (e.g., "Auxiliary," "Water feature," "Booster," etc.).

### Enable.settings

Opens the screen with conditions that may activate the auxiliary relay.

### Disable.settings

Opens the screen with conditions that block or disable the auxiliary relay.

## ❶77¡9.Enable.settings.(Auxiliary.X.on)

In this screen, you set **when AUX is allowed to switch on**.

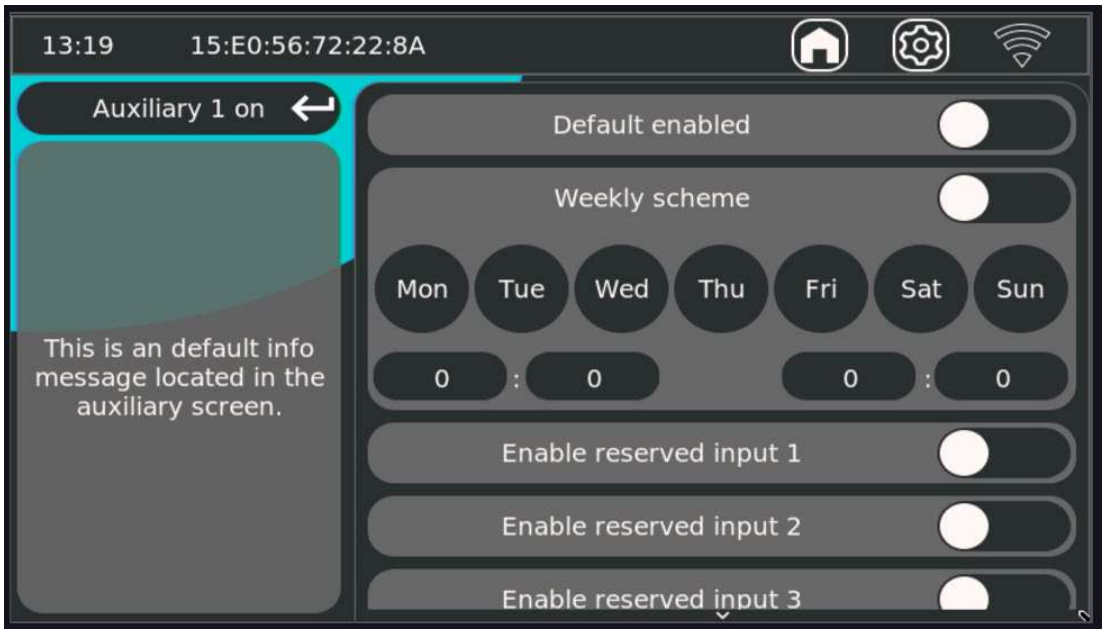


### Default.enabled

Basic permission to activate the output.

### Weekly.scheme

Weekly schedule for automatic activation.

### Mon.–.Tue.–.Wed.–.Thu.–.Fri.–.Sat.–.Sun.>.time.fields

Days and time window during which the output may be active.

### Enable.reserved.input.7.(expert)

### Enable.reserved.input.8(expert)

### Enable.reserved.input.9.(expert)

Enable AUX based on the linked reserved inputs.

Practical: Enable settings defines the “request” to switch.

### ❶¦77¡0.Disable.settings.(Auxiliary.X.off)

In this screen, you can set **when AUX must remain off or is disabled**.

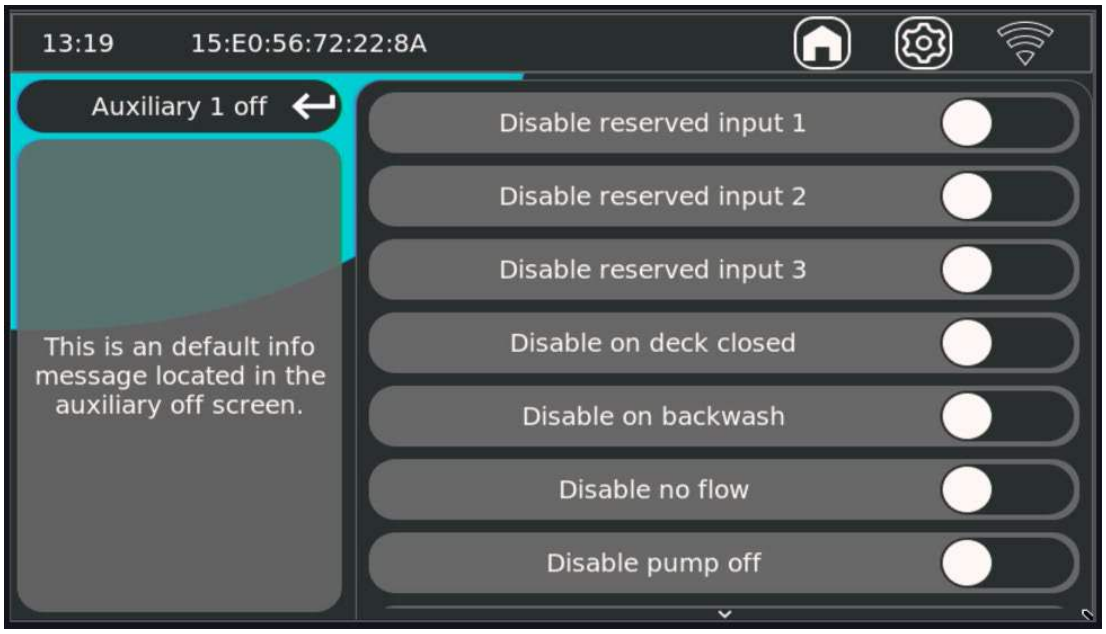


#### Disable.reserved.input.7.(expert)

#### Disable.reserved.input.8.(expert)

#### Disable.reserved.input.9.(expert)

Block/disable via reserved inputs.

#### Disable.when.deck.is.closed

Blocks AUX when the deck is closed.

#### Disable.on.backwash

Blocks AUX during backwash.

#### Disable.no.flow

Disables AUX when there is no flow.

#### Disable.pump.off

Disables AUX when the filter pump is off.

Practical note: Disable settings function as an “override”: if a disable condition is true, AUX does not activate, even if enable conditions are true.

### ❶¦77¡❶Recommended.commissioning

1. First, give each AUX a clear **Auxiliary name**.
2. Then set **the Enable settings** (default + schedule + inputs).
3. Next, configure **the Disable settings** (safety blocks).
4. Test each condition one by one (pump off, no flow, backwash, deck closed).
5. Verify that the **Control** links correspond exactly to the expected behavior.

# 6. Effective pool grounding

## 6.1 Disclaimer

Norsup provides this chapter as a technical guideline for the design, connection, and commissioning of systems with WLS-3 and associated pool components.
The installer remains responsible for:

- compliance with local laws and regulations (including NEN 1010 where applicable);
- proper implementation of protection, equipotential bonding, and cabling;
- final inspection with measurement report (continuity, potential differences, protective measures).

Norsup is not liable for damage or consequential damage resulting from improper installation, deviation from regulations, missing safety measures, or the use of unsuitable components.

Always hire an electrician for the electrical installation.

## 6.2 Introduction

- This chapter describes how to safely and reliably ground swimming pool installations, with special attention to the WLS-3 sensor and stainless steel components in and around the pool.

The goal is to limit:

- electrical malfunctions;
- potential differences;
- galvanic corrosion;
- measurement errors.

The installation must always comply with locally applicable installation regulations (including NEN 1010 where applicable). Product-specific standards and EMC guidelines support the interference-free operation of equipment but do not replace the installation requirements.

## 6.3 Problem Statement and Objective

In practice, defects arise due to potential differences between metal parts that are connected to each other via water, pipes, and/or ground.

Objectives:

- reliable operation of WLS-3;
- control of corrosion risk on stainless steel parts;
- stable measurements and fewer malfunctions;
- demonstrably safe and code-compliant installation.

## 6.4 Grounding Strategy (project-dependent)

Two implementation options are possible, depending on standard requirements and the project situation:

1. **Common grounding system (standard approach)**
   All relevant metal parts and systems are included in a single interconnected grounding and equipotential bonding system.

2. **Additional local grounding electrode (if used)**
   An additional grounding rod can be used functionally for stability/spread resistance, but in situations where standards are critical, it is incorporated into the common system in accordance with applicable regulations.

**Important:** Avoid mixed, unconnected ground references within a single installation.

## 6.5 Installation Procedure

### ❷❶7.Earth.electrode.and.spreading.resistance

- Use an earth electrode with appropriate spread resistance for the location (measure and report project-specific data).
- Install in suitable ground; record measurement results upon completion.

### ❷❶8.Equipotential.bonding

- Connect all relevant conductive parts (including stainless steel components, conductive parts of installation components, sensor housings) via the equipotential bonding bridge.
- Ensure durable, corrosion-resistant connections with good metal contact.
- Verify continuity and potential differences according to project criteria.
- Use an appropriate cable gauge.

### ❷❶9.Norsup.ONE.V9.and.WLS_9

- Connect Norsup ONE V3 and WLS-3 in accordance with product diagrams and within the project's chosen grounding concept.
- Connect shielding/reference points as specified in the product specifications.
- Check measurement stability after commissioning.

### ❷❶0.External.devices

- Include devices with their own power supply (e.g., heat pump/counterflow machine) in the same potential equalization concept.
- Follow manufacturer instructions for PE, EMC, and shielding.
- Do not create isolated systems.

### ❷❶❶RCD–ground.fault.protection

- RCD protection must be installed on the relevant power supply circuits.
- The earthing and RCD concept must be designed and tested as a single protection chain.

## 6.6 Decision rule NEN 1010 / inspection

When NEN 1010 or inspection requirements apply:

- use a single common earthing system;
- connect additional grounding electrodes to the main grounding system in accordance with the standard;
- document the implementation and measurement results.

## 6.7 Schematic Implementation

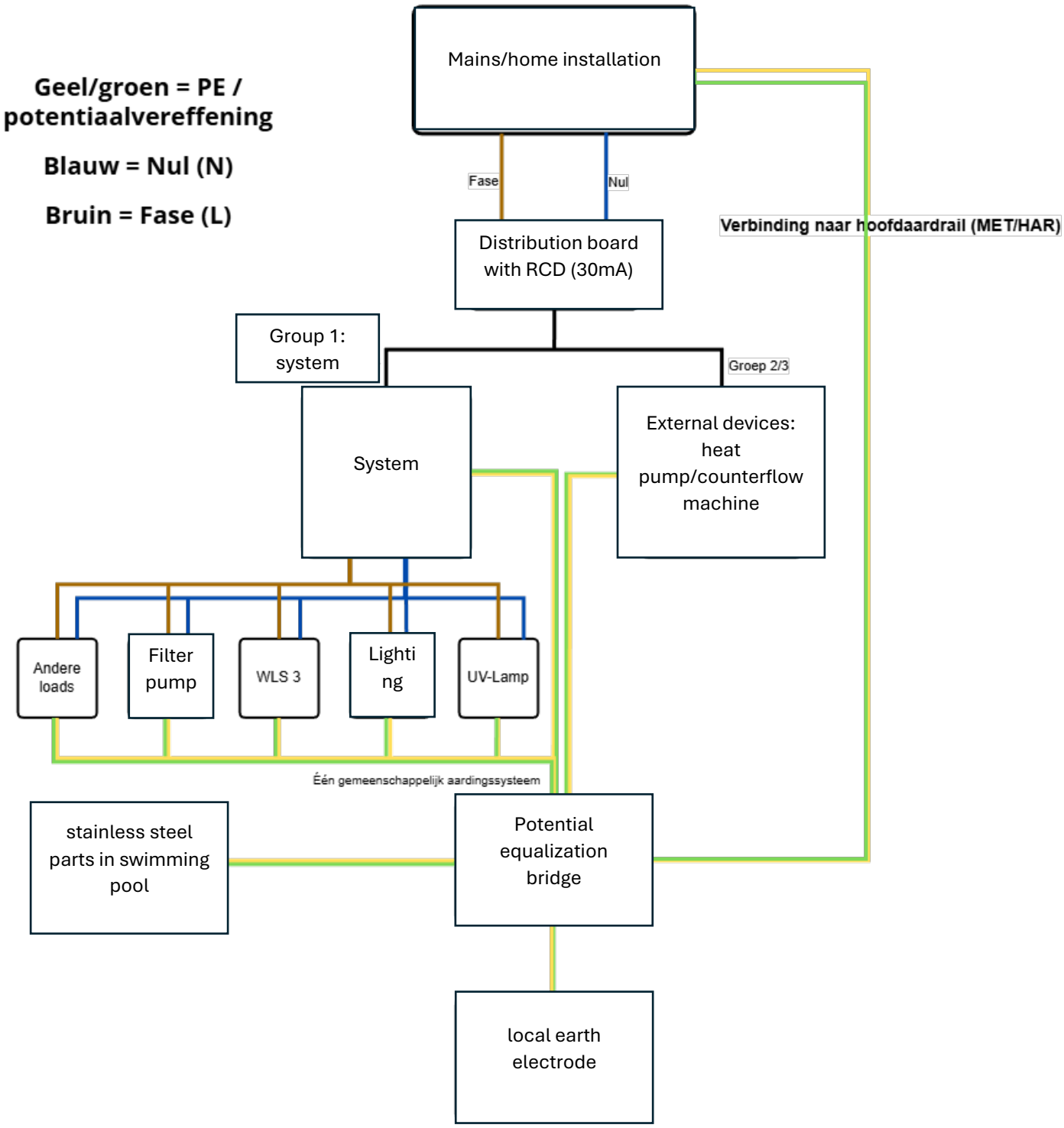


## 6.8 Expected improvement

- more stable measurements;
- less susceptibility to malfunctions;
- lower risk of corrosion due to smaller potential differences;
- greater operational reliability of WLS-3 and peripheral equipment.

## 6.9 Conclusion

A safe and stable swimming pool installation requires a consistent grounding and equipotential bonding concept without conflicting ground references.
Select the design based on the specific project, but always prioritize compliance with standards, measurability, and clarity.

Ensure that measurement reports remain available.